Dell Enterprise SONiCを使用したEVPN-VxLANベースのマルチサイトデータセンター相互接続(DCI)

December 2022

H19355

導入ガイド

要約

このガイドでは、Dell Enterprise SONiCを使用したEVPN-VxLANベースのマルチサイトデータセンター相互接続(DCI)の導入手順について説明します.

Dell Technologies Solutions

DELL Technologies

Contents

初めに

データセンター相互接続(DCI)は、地理的に分散した2つ以上のデータセンターを接続します。DCIのビジネスユースケースには、ビジネス継続性(ダウンタイムなし)、ワークロードのモビリティ、サイトの移行、負荷分散されたワークロードなどがあります。データセンターは、専用ファイバーリンク(ダークファイバー)、STPを使用したレイヤー2トランク、レイヤー3ポイントツーポイントリンクなど、さまざまな方法で接続できます。このドキュメントでは、Virtual eXtensible LAN(VxLAN)とEthernet Virtual Private Network(EVPN)を使用してマルチサイトデータセンターの相互接続を実現する方法について説明します。

VxLAN

仮想化によるネットワーク負荷の大きな変化。たとえば、あるデータセンターのコンピューティング リソースとストレージ リソースは、別の DCN からリソースを借用することでスケールアップできます。これは、仮想マシン (VM) のライブ移行を活用することで実現できます。VM の移行中および移行後のサービス継続性を確保するには、VM の IP アドレスと実行状態を変更しないようにする必要があります。VM のスムーズな移行を可能にするには、関連するすべてのサーバーをレイヤー 2 ドメインにデプロイする必要があり、レイヤー 2 ドメインは複数のリージョンにまたがることもできます。この問題に対処するために、Virtual eXtensible Local Area Network(VxLAN)が導入されました。VxLANは、インターネット技術標準化委員会(IETF)によって定義されたレイヤ3(NVO3)テクノロジーを介したネットワーク仮想化の一例です。VxLAN は、レイヤ 2 イーサネット フレームをカプセル化し、VxLAN トンネル経由で送信することで、レイヤ 2 ドメインの拡張を支援します。トンネルは、仮想マシン(VM)トラフィックを VxLAN ヘッダーにカプセル化およびカプセル化解除するエンド ホスト、ネットワーク スイッチ、またはルータである 2 つの仮想トンネル エンドポイント(VTEP)間で確立されます。VLANの拡張と見なすことができるVxLANは、VLANスケーリングの制限も解決します。IEEE 802.1Q 規格によると、数千の VM をホストできる大規模なデータセンターのネットワーク分離要件を満たしていないスイッチでは、4,000 個の VLAN しか作成できません。また、理論的には、管理ドメインに1,600万ものVxLANを作成できます。

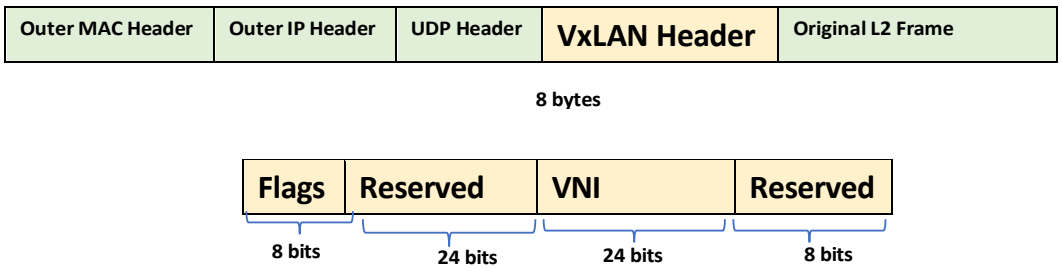

図 1.　VxLAN ヘッダー

各パケットには、VxLANにはVNIと呼ばれる特定のNVOインスタンスの識別子が含まれます。VxLAN カプセル化は UDP に基づいており、UDP ヘッダーの後に 8 バイトのヘッダーが続きます。VxLAN は、図 1 に示すように 24 ビットの VNI を提供し 、[RFC7348] で説明するように、通常、テナント VLAN ID(VID)への 1 対 1 のマッピングを提供します。

Integrated Routing and Bridging(IRB) は、ルーター上の同じインターフェイスでルーティングとブリッジングを可能にする技術です。IRB では、ルーターはインターフェイス間でフレームを転送するときに既存の VLAN ヘッダーを維持します。 VxLAN は、次の 2 種類の IIRB 技術を使用して、L3 ネットワーク上で L2 ホスト サブネットを拡張します。

- 非対称ルーティングでは、すべての VTEP がルーティングを実行できます。ルーティングの決定は、入力 VTEP でのみ行われます。出力 VTEP はブリッジングのみを実行します。
- 対称ルーティングでは、すべての VTEP もルーティングを実行しますが、ルーティングの決定は入力 VTEP と出力 VTEP の両方で行われます。

非対称 IRB

非対称 IRB では、各 L2 ホスト VLAN は一意の VxLAN VNI にマッピングされます。テナントが 1 つの場合は、デフォルトの VRF が使用されます。複数の L2 テナントがデフォルト以外の VRF を使用します。 入力 VTEP はルーティングとブリッジングを実行し、出力 VTEP は L2 ブリッジングのみを実行します。

ルーティングは入力 VTEP でのみ実行されるため、VxLAN トンネルの出力 VTEP はブリッジングのみを実行し、対称 IRB のようにルーティングは実行しないため、パフォーマンスが向上します。非対称 IRB を使用する欠点は、ネットワーク内の各 VTEP ですべてのテナント VLAN を設定する必要があることです。その結果、各 VTEP は(対称 IRB と比較して)より多くのルーティング テーブル メモリを使用します。このため、非対称 IRB は通常、中小規模のデータセンターに導入されます。

対称 IRB

対称 IRB では、ルーティングは入力 VTEP と出力 VTEP の両方で実行されます。対称 IRB を使用する場合、ホスト VLAN はローカル VTEP でのみ設定する必要があります。その結果、各 VTEP で使用されるルーティング テーブル メモリが削減され、対称 IRB を大規模なデータセンターでより適切に拡張できます。対称 IRB は、専用の L3 VNI を使用して、テナント VRF 内のホスト VLAN 間でトラフィックをルーティングします。

EVPN

最初のVxLANソリューションでは、コントロールプレーンは定義されていません。VxLAN トンネルは手動で設定され、ホスト アドレスはトラフィック フラッディングによって学習されますが、これは大規模なレイヤ 2 ドメインでは非常に望ましくありません。EVPNは、この問題に対処するためにVxLANのコントロールプレーンとして使用されます。マルチプロトコルBGP(MP-BGP)を利用して、VxLANトンネルの作成に必要な情報をアドバタイズします。BGP-4 では、ルート更新はネットワーク層到達可能性情報(NLRI)フィールドで伝送されます。BGP-4 は IPv4 ユニキャスト ルーティング情報しか管理できないため、IPv6 やマルチキャストなどの複数のネットワーク層プロトコルをサポートするように MP-BGP が開発されました。MP-BGP は、IPv6 ユニキャスト アドレス ファミリや VPN インスタンス アドレス ファミリなどのネットワーク層プロトコルを区別するために、アドレス ファミリの説明を追加することで NLRI フィールドを拡張します。EVPNは、EVPN NLRIと呼ばれる新しいタイプのBGP NLRIを定義して、他のサ

イトからのMACアドレスの学習を可能にします。EVPN NLRI は、次のタイプのルートを定義します。

- タイプ 1 ルート:イーサネット自動検出(A-D)ルート
- タイプ 2 ルート:ホスト(MAC/IP)アドバタイズメント ルート
- タイプ 3 ルート:包括的マルチキャスト ルート
- タイプ 4 ルート:イーサネット セグメント ルート
- タイプ 5 ルート:IP プレフィックス ルート

タイプ 1 からタイプ 4 のルートは [RFC7432] で定義され、タイプ 5 のルートは [RFC9136] で定義されます。このドキュメントでは、タイプ2、タイプ3、およびタイプ5のEVPNルートの説明に焦点を当てています。DCI 操作を理解するには、これらのルート タイプを理解する必要があります。タイプ 2 ルートまたはホスト(MAC/IP)アドバタイズメント ルートは、ホストの IP アドレスと MAC アドレスの情報を相互にアドバタイズするために VTEP によって使用されます。VTEP はタイプ 3 ルートを使用して、IP アドレスと L2VNI を相互にアドバタイズします。これにより、自動VTEP検出とVxLANトンネルの動的作成が可能になります。ピア VTEP の IP アドレスへの到達可能なルートがある場合、ローカル VTEP からピア VTEP への VxLAN トンネルが確立されます。さらに、ローカルとリモートの VNI が同じ場合、BUM パケット転送用に入力レプリケーション リストが作成されます。最後に、タイプ 5 ルートは、ネットワーク セグメント ルートの送信に使用されます。32 ビット(IPv4)または 128 ビット(IPv6)のホスト ルートのみを送信するタイプ 2 ルートとは異なり、タイプ 5 ルートは、0 ～ 32 ビットまたは 0 ～ 128 ビットの範囲のマスク長を持つネットワーク セグメント ルートを送信できます。EVPN を VxLAN のコントロール プレーンとして使用すると、次の利点があります。

- VTEPを自動的に検出し、VxLANトンネルを自動的に確立できるため、ネットワークの導入と拡張が簡素化されます。
- EVPN は、レイヤ 2 MAC アドレス情報とレイヤ 3 ルーティング情報の両方をアドバタイズできます。
- ネットワーク上のフラッディング トラフィックが削減されます。

ゲートウェイ

EVPN-VxLANは、データセンター内でスケーラブルで効率的なマルチテナントソリューションを提供します。ただし、異なるデータセンターでオーバーレイを提供する論理エンティティ、またはカプセル化とカプセル化解除が行われるネットワーク仮想化エッジ(NVE)を相互接続する必要がある場合は、ゲートウェイ機能が必要です。GW では、VNI をグローバル一意識別子として使用できます。ネットワーク境界を越えるときに VNI を変換し、オペレーターの制御範囲境界と一致する場合があります。この導入モデルは、通常、マルチサイト DCI と呼ばれます。2 つのゲートウェイは、マルチシャーシ リンク アグリゲーション(MC-LAG)を使用して相互に接続し、冗長性を提供することもできます。

たとえば、図 2 に示したネットワークに 3 つのネットワーク オペレーター (DC1、DC2、および WAN ネットワークにそれぞれ 1 つずつ) があるとします。データセンタ

ーのエッジにあるゲートウェイは、各 DCN で使用される値と WAN で使用される値の間で VNI を変換する役割を担います。

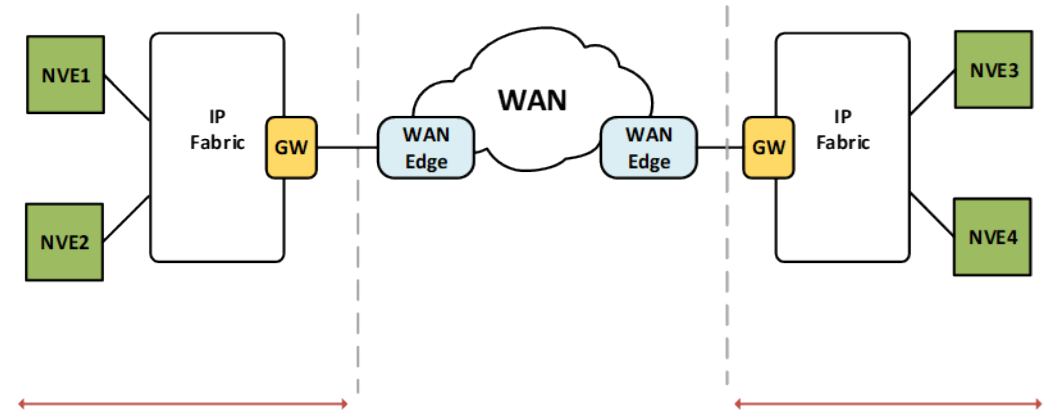

図 2. ゲートウェイによるデータセンターの相互接続

マルチサイト DCI

GW と WAN エッジの機能は、2 つの別々のシステムに分離することも(分離された相互接続ソリューション)、同じシステムに統合することもできます(統合相互接続ソリューション)。

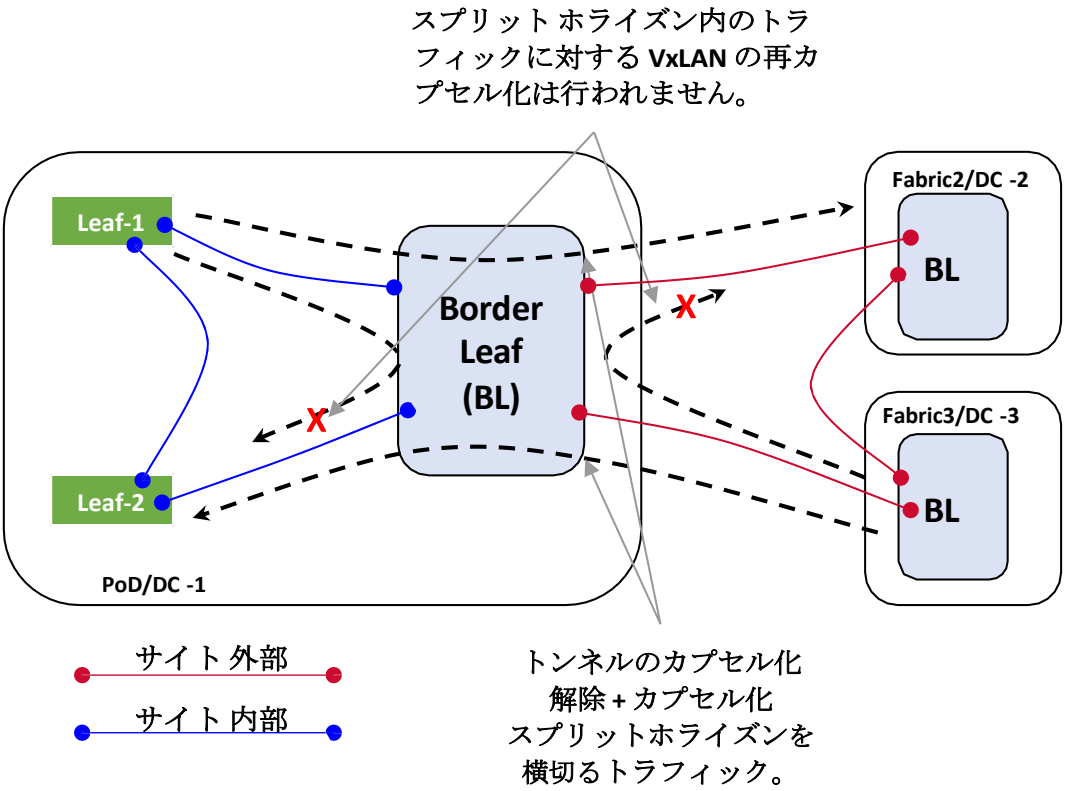

図 3.　スプリットホライズン

このドキュメントでは、Dell Enterprise SONiC 4.0リリースで導入された統合ソリューションに焦点を当てています。マルチファブリックまたはマルチサイトアーキテクチャは、ゲートウェイまたはボーダーリーフ(BL)ノードのサイト/PoD内から発信されたVxLANトンネルを終端します。分離されたソリューションでは、リモート サイトへの VxLAN トンネルは同じ BL ノードで発信されません。代わりに、データプレーンとコントロールプレーンは、VxLANがリモートサイト/PoDにトンネリングする別のBL(WANEdge)ノードへのハンドオフを受けます。このアーキテクチャは、複数のPoD/サイトを相互接続するためのスケーラブルなソリューションを提供しますが、各PoD/サイトに別のノードペアをプロビジョニングするという制限が課せられます。統合されたGWアーキテクチャでは、BLはBGPアップデートをインポートして再発信するだけでなく、BLを通過するVxLANデータトラフィックのカプセル化を解除して再カプセル化することもできます。ここでの目標は、図 3 に示すように、VxLAN ネットワークを 2 つのスプリット ホライズン(サイト内部とサイト外部)に分割することです。スプリット ホライズンは、ネットワーク ループを回避する方法です。

サイト内部ネットワークは、サイト内の VTEP への VxLAN トンネルで構成されます。サイト外部ネットワークは、リモート サイトの BL への VxLAN トンネルで構成されます。サイト内部ネットワークとサイト外部ネットワークはスプリットホライズングループを分離し、BLがBLを通過するルートとデータトラフィックを終端および再発信できるようにします。

Site-1 の BL は、PoD/DC 内のリーフ ノードから発信された VxLAN トラフィックを終端します。L2 トラフィックは再カプセル化され、リモート サイトへの VxLAN トンネルに切り替わります。スプリット ホライズンにより、L2 トラフィックは PoD/DC 内の VTEP に向けて VxLAN トンネルにスイッチバックされません。リモートBLから到着するトラフィックについても同じことが言えます。PoD/DC 内では、VTEP は他の VTEP への直接トンネルを持っているため、トラフィックをスイッチバックするために BL は必要ありません。また、BGP コントロール プレーンは、サイト内部ネイバーとサイト外部ネイバーを認識する必要があります。BL上のBGPは、次のタスクを実行します。

- 内部から外部(または外部から内部)ネイバーへのルートを、ネクストホップと RMAC を自己として再アドバタイズします。
- BLにインポートされたルートのみを再アドバタイズします。
- タイプ 1 やタイプ 4 などのローカル スコープを持つ内部ネイバーと外部ネイバーの間でルートを伝搬することはできません。

Figure 4. Multisite DCI Testbed Topology

マルチサイト DCI 展開

この導入ガイドでは、マルチサイトDCIテストベッドを設定します。このテスト ベッドには、ファブリック A とファブリック B の 2 つのファブリックが含まれており、WAN 接続を介して相互に接続されています。わかりやすくするために、各ファブリックで 1 つの BL スイッチのみを検討しました。ただし、冗長性のために、MC-LAG を使用して 2 つの BL ルータを接続するのが一般的な方法です。どちらのファブリックでも、最初に一般的なスパイン リーフ トポロジを作成し、後で番号なし BGP を設定します。最後に、DCI 構成を使用して仮想ネットワークを構成します。

リーフとスパインのネットワーク構成

表 1 と 表 2 に、ファブリック A とファブリック B の設定の詳細を示します.

表 1. ファブリック A の構成

Platforms	DellEMC-S5232f-C32	DellEMC-Z9332f-C32	DellEMC-S5232f-C32
Hostname	Fabric-A-Leaf1	Fabric-A-Spine1	Fabric-A-BL1
SONiC Version	4.0.2 Enterprise	4.0.2 Enterprise	4.0.2 Enterprise
Autonomous System Number (ASN)	65001	65000	65012
VTEP IDs	VTEP1	-	VTEP12
Loopback0 address (router ID)	10.0.1.1/32	10.0.1.0/32	10.0.1.12/32
Loopback1 address (NVE Internal VTEP)	10.101.101.1/32	-	10.101.101.12/32
Loopback2 address (Multisite External VTEP)	-	-	10.111.111.12/32
Vlan 101 anycast ip	192.168.10.254/24	-	192.168.10.254/24
Vlan 101 L2 VNI mapping	10101	-	10101
Vlan 101 Vrf	VrfTenant1	-	VrfTenant1
Vlan 201 anycast ip	192.168.20.254/24	-	192.168.20.254/24
Vlan 201 L2 VNI mapping	10201	-	10201
Vlan 201 Vrf	VrfTenant2	-	VrfTenant2
Vlan 3101 L3 VNI mapping	103101	-	103101
Vlan 3101 Vrf	VrfTenant1	-	VrfTenant1
Vlan 3102 L3 VNI mapping	103102	-	103102
Vlan 3102 Vrf	VrfTenant2	-	VrfTenant2

表 2. ファブリック B の構成

Platforms	DellEMC-S5248f-P-25G-DPB	DellEMC-Z9264f-C64	DellEMC-S5232f-C32
Hostname	Fabric-B-Leaf1	Fabric-B-Spine1	Fabric-B-BL1
SONiC Version	4.0.2 Enterprise	4.0.2 Enterprise	4.0.2 Enterprise
Autonomous System Number (ASN)	64601	64600	64612
VTEP IDs	VTEP1	-	VTEP12
Loopback0 address (router ID)	10.0.2.1/32	10.0.2.0/32	10.0.2.12/32
Loopback1 address (NVE Internal VTEP)	10.201.201.1/32	-	10.201.201.12/32
Loopback2 address (Multisite External VTEP)	-	-	10.211.211.12/32

Vlan 101 anycast ip	192.168.50.254/24	-	192.168.50.254/24
Vlan 101 VNI mapping	20101	-	20101
Vlan 101 Vrf	VrfTenant1	-	VrfTenant1
Vlan 201 anycast ip	192.168.60.254/24 & 20101	-	192.168.60.254/24
Vlan 201 VNI mapping	20201	-	20201
Vlan 201 Vrf	VrfTenant2	-	VrfTenant2
Vlan 3101 L3 VNI mapping	203101	-	203101
Vlan 3101 Vrf	VrfTenant1	-	VrfTenant1
Vlan 3102 L3 VNI mapping	203102	-	203102
Vlan 3102 Vrf	VrfTenant2	-	VrfTenant2

スイッチの準備 – OS バージョン

VxLANは、Dell Enterprise SONiC Enterprise Bundleの標準バージョンとプレミアム バージョンでサポートされています。EVPN VxLAN マルチサイトおよびダウンストリーム割り当て VNI(D-VNI)機能のサポートは、SONiC 4.0.0 リリースから追加されました。

```
show version

Software Version  : '4.0.2-Enterprise_Advanced'
Product           : Enterprise SONiC Distribution by Dell Technologies
Distribution      : '10.12'
Kernel            : '4.19.0-9-2-amd64'
Config DB Version : version_4_0_2
Build Commit      : 'bc3a8f54f'
Build Date        : Sun Sep  4 15:55:54 UTC 2022
Built By          : sonicbld@sonic-lvn-csg-004
```

ホスト名の初期設定

次の表に、各ファブリックとデバイスを識別するために必要なホスト名とLLDPシステム名を示します。

Fabric-A-Leaf1	Fabric-A-Spine1	Fabric-A-BL1
sonic-cli configure terminal hostname Fabric-A-Leaf1 lldp system-name Fabric-A-Leaf1 end write memory	sonic-cli configure terminal hostname Fabric-A-Spine1 lldp system-name Fabric-A-Spine1 end write memory	sonic-cli configure terminal hostname Fabric-A-BL1 lldp system-name Fabric-A-BL1 end write memory

Fabric-B-Leaf1	Fabric-B-Spine1	Fabric-B-BL1
sonic-cli configure terminal hostname Fabric-B-Leaf1 lldp system-name Fabric-B-Leaf1 end write memory	sonic-cli configure terminal hostname Fabric-B-Spine1 lldp system-name Fabric-B-Spine1 end write memory	sonic-cli configure terminal hostname Fabric-B-BL1 lldp system-name Fabric-B-BL1 end write memory

スパイン リーフ インターフェイスの有効化

この項では、スパイン スイッチとリーフ スイッチを接続するインターフェイスの設定について説明します。また、各インターフェイスで IPv6 を有効にして、番号なし BGP を設定します。

アンナンバード BGP

BGP は、ネイバー デバイスとの接続に TCP を使用します。ネイバーに接続するルーター インターフェイスには、一意の IP アドレスが必要です。各ルータ インターフェイスに IP アドレスを割り当てると、使用可能な IP アドレスのプールを使い果たす可能性があります。番号なしインターフェイスには、ユーザ設定の IP アドレスがありません。代わりに、BGP アンナンバード インターフェイスは、[RFC5549] で定義されているように、Extended Next-Hop Encoding(ENHE)機能を使用して、IPv6 ネクスト ホップで IPv4 ルートをアドバタイズします。BGP ネイバーに接続されているインターフェイスで IPv6 を有効にすると、IPv6 リンクローカル アドレスが自動的に作成されます。BGP は、リンクローカル アドレスを使用して、ネイバーとの BGP セッションを設定します。

番号なしインターフェイスは、IPv6 ルータ アドバタイズメント(RA)を使用して BGP ネイバーのアドレスを識別します。番号なし BGP を使用すると、ホストとスイッチはネイバー ルータを自動的に検出します。ポイントツーポイント リンクで接続されているピア ルーターは、ルーター アドバタイズメントを解析することによって検出されます。各ルータは、MAC アドレスとリンクローカル アドレスを含む RA を定期的に生成します。BGP 対応ルータで番号なしインターフェイスを設定すると、インターフェイスはピア デバイスから受信した RA 情報を解析し、デバイスとの BGP セッションを設定します。次の表に、各インターフェイスで IPv6 を有効にするために必要な設定を示します。

Fabric-A-Leaf1	Fabric-A-Spine1	Fabric-A-BL1
configure terminal interface Ethernet92 description "Connected to Spine1" no shutdown **ipv6 enable** exit	configure terminal interface Ethernet168 description "Connected to Leaf1" no shutdown **ipv6 enable** exit interface Ethernet192 description "Connected to BL1" no shutdown **ipv6 enable** exit	configure terminal interface Ethernet92 description "Connected to Spine1" no shutdown **ipv6 enable** exit

次の表に示すように、ファブリック B にも同様の設定が必要です。

Fabric-B-Leaf1	Fabric-B-Spine1	Fabric-B-BL1
configure terminal interface Ethernet64 description "Connected to Spine1" no shutdown **ipv6 enable** exit	configure terminal interface Ethernet40 description "Connected to Leaf1" no shutdown **ipv6 enable** exit interface Ethernet88 description "Connected to BL1" no shutdown **ipv6 enable** exit	configure terminal interface Ethernet96 description "Connected to Spine1" no shutdown **ipv6 enable** exit

ルータ ID のループバックの設定

Fabric-B-Leaf1	Fabric-B-Spine1	Fabric-B-BL1
configure terminal interface Loopback 0 description Router-ID ip address 10.0.2.1/32 exit	configure terminal interface Loopback 0 description Router-ID ip address 10.0.2.0/32 exit	configure terminal interface Loopback 0 description Router-ID ip address 10.0.2.12/32 exit

The following tables describe how to create dedicated loopback IP for BGP router ID to uniquely identify router at Layer 3 and avoid BGP automatically selecting anycast IP address.

Fabric-A-Leaf1	Fabric-A-Spine1	Fabric-A-BL1
configure terminal interface Loopback 0 description Router-ID ip address 10.0.1.1/32 exit	configure terminal interface Loopback 0 description Router-ID ip address 10.0.1.0/32 exit	configure terminal interface Loopback 0 description Router-ID ip address 10.0.1.12/32 exit

BGP 構成

次の表は、BGP 設定に必要なコマンドをまとめたものです。後で、BGPの設定のために各ノードで必要なコマンドのリストを提供します。

Configuration	Description
router bgp 65001 router-id 10.0.1.1 bestpath as-path multipath-relax	Configure BGP router as ASN number 65000 Configure router-id IP from loopback 0 interface Permits paths of equal length even if their AS paths differ
address-family ipv4 unicast redistribute connected maximum-paths 128	Advertise underlay networks and VTEPs Creates 128 ECMP path
address-family l2vpn evpn advertise-all-vni	Advertise all VNIs on overlay
peer-group spine remote-as external bfd capability extended-nexthop ! address-family ipv4 unicast activate allowas-in 2 ! address-family l2vpn evpn activate	Create peer-group spine external keyword forms eBGP neighbor Enable BFD neighborship with spine Enable BGP unnumbered Activate IPv4 unicast address family Provided here for the sake of completeness. It is not needed in absence of MC-LAG. Activate l2vpn evpn address family
neighbor interface Ethernet92 peer-group spine	Assign spine connected interface to peer-group spine

BGP AS 番号の設定

次の表に、BGP を設定するために各スイッチで必要なコマンドの完全なリストを示します。

Fabric-A-Leaf1	Fabric-A-Spine1	Fabric-A-BL1

configure terminal
 	
router bgp 65001
 router-id 10.0.1.1
 bestpath as-path multipath-relax
 !
 address-family ipv4 unicast
  redistribute connected
  maximum-paths 128
 !
 address-family l2vpn evpn
  advertise-all-vni
 !
 peer-group spine
  remote-as external
  bfd
  capability extended-nexthop
  !
  address-family ipv4 unicast
  activate
  allowas-in 2
  !
  address-family l2vpn evpn
  activate
 !
 neighbor interface Ethernet92
  peer-group spine
 !
 end
 	
write memory
	configure terminal
	
	router bgp 65000
	 router-id 10.0.1.0
	 bestpath as-path multipath-relax
	 !
	 address-family ipv4 unicast
	  redistribute connected
	  maximum-paths 128
	 !
	 address-family l2vpn evpn
	 !
	 peer-group borderRouter
	  remote-as external
	  bfd
	  capability extended-nexthop
	 !
	  address-family ipv4 unicast
	  activate
	  !
	  address-family l2vpn evpn
	  activate
	 !
	 peer-group leaf
	  remote-as external
	  bfd
	  capability extended-nexthop
	  !
	  address-family ipv4 unicast
	  activate
	  !
	  address-family l2vpn evpn
	  activate
	 !
	neighbor interface Ethernet168
	  peer-group leaf
	 !
	 neighbor interface Ethernet192
	  peer-group borderRouter
	 !
	 end
	
	write memory
		configure terminal
		
		router bgp 65012
		 router-id 10.0.1.12
		 bestpath as-path multipath-relax
		 !
		 address-family ipv4 unicast
		  redistribute connected
		  maximum-paths 128
		 !
		 address-family l2vpn evpn
		  advertise-all-vni
		 !
		 peer-group spine
		  remote-as external
		  bfd
		  capability extended-nexthop
		  !
		  address-family ipv4 unicast
		  activate
		  allowas-in 2
		  !
		  address-family l2vpn evpn
		  activate
		 !
		 neighbor interface Ethernet92
		  peer-group spine
		 !
		 end
		
		write memory

Fabric-A-Spine1 からのコマンド出力の表示

次のコマンドを使用して、LLDPテーブルとインターフェイスの設定を確認します。

```
Fabric-A-Spine1# show lldp table
-----------------------------------------------------------------------------------------
-------
LocalPort           RemoteDevice        RemotePortID        Capability          RemotePortDescr
-----------------------------------------------------------------------------------------
--------
Ethernet168         Fabric-A-Leaf1       Ethernet92          R                   Connected to
Spine1
Ethernet192         Fabric-A-BL1         Ethernet92          R                   Connected to
Spine1
Fabric-A-Spine1#
```

```
Fabric-A-Spine1# show ipv6 interfaces
Flags: U-Unnumbered interface, A-Anycast IP
-----------------------------------------------------------------------------------------
------------------
Interface            IP address/mask                              VRF
Admin/Oper     Flags
-----------------------------------------------------------------------------------------
------------------
eth0                 fe80::6e2b:59ff:fefc:1320/64                 mgmt                up/up
Ethernet168          fe80::6e2b:59ff:fefc:1324/64                                     up/up
Ethernet192          fe80::6e2b:59ff:fefc:1324/64                                     up/up
```

```
Fabric-B-Spine1# show ip interfaces
Flags: U-Unnumbered interface, A-Anycast IP
-----------------------------------------------------------------------------------------
------------------
Interface            IP address/mask                              VRF
Admin/Oper     Flags
-----------------------------------------------------------------------------------------
------------------
eth0                 172.17.100.44/24                             mgmt                up/up
Loopback0            10.0.1.0/32                                                      up/up
```

```
Fabric-A-Spine1# show bgp ipv4 unicast summary
BGP router identifier 10.0.1.0, local AS number 65000 VRF default
Neighbor        V   AS         MsgRcvd   MsgSent   InQ     OutQ    Up/Down         State/PfxRcd
Ethernet168     4   65001      66        65        0       0       00:19:07        2
Ethernet192     4   65012      64        64        0       0       00:18:12        9
Total number of neighbors 2
Total number of neighbors established 2
```

```
Fabric-A-Spine1# show bgp l2vpn evpn summary
BGP router identifier 10.0.1.0, local AS number 65000 VRF default
Neighbor        V   AS         MsgRcvd   MsgSent   InQ     OutQ    Up/Down         State/PfxRcd
Ethernet168     4   65001      67        66        0       0       00:20:13        0
Ethernet192     4   65012      65        65        0       0       00:19:18        0
Total number of neighbors 2
Total number of neighbors established 2
```

次の表に示すように、ファブリック B にも同様の設定が必要です。

Fabric-B-Leaf1	Fabric-B-Spine1	Fabric-B-BL1
configure terminal router bgp 64601 router-id 10.0.2.1 bestpath as-path multipath-relax ! address-family ipv4 unicast redistribute connected maximum-paths 128 ! address-family l2vpn evpn advertise-all-vni ! peer-group spine remote-as external bfd **capability extended-nexthop** ! address-family ipv4 unicast activate allowas-in 2 ! address-family l2vpn evpn activate ! neighbor interface Ethernet64 peer-group spine ! end write memory	configure terminal router bgp 64600 router-id 10.0.2.0 bestpath as-path multipath-relax ! address-family ipv4 unicast redistribute connected maximum-paths 128 ! address-family l2vpn evpn ! peer-group borderRouter remote-as external bfd **capability extended-nexthop** ! address-family ipv4 unicast activate ! address-family l2vpn evpn activate ! peer-group leaf remote-as external bfd **capability extended-nexthop** ! address-family ipv4 unicast activate ! address-family l2vpn evpn activate ! neighbor interface Ethernet40 peer-group leaf ! neighbor interface Ethernet88 peer-group borderRouter ! end write memory	configure terminal router bgp 64612 router-id 10.0.2.12 bestpath as-path multipath-relax ! address-family ipv4 unicast redistribute connected maximum-paths 128 ! address-family l2vpn evpn advertise-all-vni ! peer-group spine remote-as external bfd **capability extended-nexthop** ! address-family ipv4 unicast activate allowas-in 2 ! address-family l2vpn evpn activate ! neighbor interface Ethernet96 peer-group spine ! end write memory

サーバ側ポート VLAN および VRF 構成

このセクションでは、ホストと仮想マシンをシームレスに移行するための静的エニーキャスト アドレスの設定について説明します。スタティック エニーキャスト ゲートウェイ(SAG)を使用すると、アクティブ/アクティブ ルータ設定で共通のゲートウェイ アドレスを使用して、複数のスイッチが同時にパケットをルーティングできます。各スイッチは、同じエニーキャスト仮想 IP アドレスとエニーキャスト仮想 MAC アドレスのセットで設定されます。複数のテナントの場合は、テナントごとに VLAN と VRF を設定します。ARP 抑制を有効にして、ARP 要求からのブロードキャスト トラフィックによって引き起こされる VxLAN ネットワークのネットワーク フラッディングを減らします。エンド ホストが別のエンドホストに ARP 要求を送信すると、ローカル VTEP は、各 VTEP で関連付けられた VNI の MAC/IP バインディングのテーブルを維持することで、ARP 応答で応答します。次の表に、重要なスクリプトの説明を示します。

Configuration	Description
`ip anycast-address enable` `ip anycast-mac-address 00:11:11:11:11:11`	Enable static anycast-address and anycast MAC address

`ip vrf mgmt`
`ip vrf VrfTenant1`
`ip vrf VrfTenant2`
	Assign VRF per tenant

`interface Vlan 101`
` description "Tenant-1 Compute VM"`
` neigh-suppress`
` ip vrf forwarding VrfTenant1`
` ip anycast-address 192.168.10.254/24`
	Enable neighbor ARP suppression
	Assign host VLANs to each tenant VRF
	Assign anycast IP address on each participating VLAN

`interface Ethernet16`
` description "Connected to Tenant-1 Compute"`
` no shutdown`
` switchport access Vlan 101`
` exit`
	Assign access VLAN to host connected interface

Fabric-A-Leaf1	Fabric-A-Spine1	Fabric-A-BL1
configure terminal ip anycast-address enable ip anycast-mac-address 00:11:11:11:11:11 ip vrf mgmt ip vrf VrfTenant1 ip vrf VrfTenant2 interface Vlan 101 description "Tenant-1 Compute VM" neigh-suppress ip vrf forwarding VrfTenant1 ip anycast-address 192.168.10.254/24 exit interface Vlan 201 description "Tenant-2 Compute VM" neigh-suppress ip vrf forwarding VrfTenant2 ip anycast-address 192.168.20.254/24 exit interface Ethernet16 description "Connected to Tenant-1 Compute" no shutdown switchport access Vlan 101 exit interface Ethernet20 description "Connected to Tenant-2 Compute" no shutdown switchport access Vlan 201 exit	configure terminal ip vrf mgmt	configure terminal ip anycast-address enable ip anycast-mac-address 00:11:11:11:11:11 ip vrf mgmt ip vrf VrfTenant1 ip vrf VrfTenant2 interface Vlan 101 description "Tenant-1 Compute VM" neigh-suppress ip vrf forwarding VrfTenant1 ip anycast-address 192.168.10.254/24 exit interface Vlan 201 description "Tenant-2 Compute VM" neigh-suppress ip vrf forwarding VrfTenant2 ip anycast-address 192.168.20.254/24 exit interface Ethernet16 description "Connected to Tenant-1 Compute" no shutdown switchport access Vlan 101 exit interface Ethernet20 description "Connected to Tenant-2 Compute" no shutdown switchport access Vlan 201 exit

Fabric-B-Leaf1	Fabric-B-Spine1	Fabric-B-BL1
configure terminal ip anycast-address enable ip anycast-mac-address 00:22:22:22:22:22 ip vrf mgmt ip vrf VrfTenant1 ip vrf VrfTenant2 interface Vlan 101 description "Tenant-1 Compute VM" neigh-suppress ip vrf forwarding VrfTenant1 ip anycast-address 192.168.50.254/24 exit interface Vlan 201 description "Tenant-2 Compute VM" neigh-suppress ip vrf forwarding VrfTenant2 ip anycast-address 192.168.60.254/24 exit interface Ethernet0 description "Connected to Tenant-1 Compute" no shutdown switchport access Vlan 101 exit interface Ethernet1 description "Connected to Tenant-2 Compute" no shutdown switchport access Vlan 201 exit	configure terminal ip vrf mgmt.	configure terminal ip anycast-address enable ip anycast-mac-address 00:22:22:22:22:22 ip vrf mgmt ip vrf VrfTenant1 ip vrf VrfTenant2 interface Vlan 101 description "Tenant-1 Compute VM" neigh-suppress ip vrf forwarding VrfTenant1 ip anycast-address 192.168.50.254/24 exit interface Vlan 201 description "Tenant-2 Compute VM" neigh-suppress ip vrf forwarding VrfTenant2 ip anycast-address 192.168.60.254/24 exit interface Ethernet0 description "Connected to Tenant-1,2 Compute" no shutdown switchport access Vlan 101 exit interface Ethernet4 description "Connected to Tenant-2 Compute" no shutdown switchport access Vlan 201 exit

Fabric-A-Leaf1 からのコマンド出力の表示

次のコマンドを使用して、VRF、VLAN、およびMACアドレステーブルのステータスを表示します。

```
Fabric-A-Leaf1# show ip vrf
VRF-NAME             INTERFACES
------------------------------------------------------------
VrfTenant1           Vlan101
VrfTenant2           Vlan201
default              Ethernet92
                     Loopback0
                     Loopback1
mgmt                 eth0
Fabric-A-Leaf1#
```

```
Fabric-A-Leaf1# show Vlan
Q: A - Access (Untagged), T - Tagged
NUM         Status       Q Ports             Autostate    Dynamic
101         Active       A  Ethernet16        Enable       No
201         Active       A  Ethernet20        Enable       No
Fabric-A-Leaf1#
```

```
Fabric-A-Leaf1# show mac address-table
-------------------------------------------------------------
VLAN          MAC-ADDRESS          TYPE          INTERFACE
-------------------------------------------------------------
101          00:0C:29:04:53:EF    DYNAMIC        Ethernet16
201          00:0C:29:7C:8E:34    DYNAMIC        Ethernet20
Fabric-A-Leaf1#
```

```
Fabric-A-Leaf1# show ip arp vrf VrfTenant1
Type: R - Remote Neighbor entries (EVPN or MC-LAG Separate IP)
------------------------------------------------------------------------
-------------------------
Address              Hardware address    Interface            Egress
Interface            Type
------------------------------------------------------------------------
-------------------------
192.168.10.1         00:0c:29:04:53:ef   Vlan101              Ethernet16
Dynamic
```

DCI 構成の仮想ネットワーク

データセンターの各サイトで、BLは複数のリモートサイトに接続します。これらの境界ルータは、BGP EVPN でファブリック外部として設定されます。ファブリック内で生成されたすべてのアウトバウンド トラフィックは BL で終端され、リモート サイトに再発信されます。BL 間のルートは、ネクスト ホップを変更せずに交換されます。内部 VxLAN トンネルと外部 VxLAN トンネルを区別するには、BL[11] で個別の外部 IP アドレスが必要です。ダウンストリーム VNI は、トンネルごとの VNI マッピングを維持するリモート サイトに接続するために必要です。VNI:ダウンストリームは、VNI から VLAN へのマッピングが異なる 2 つの DC サイトを接続するために使用されます。VNI:ダウンストリームは、外部アドレスまたは IP アドレスで設定できます。複数の DC サイトを接続する場合、サイトの 1 つが異なる VNI から VLAN へのマッピングを共有している場合、VNI ダウンストリーム IP アドレスには external-IP が割り当てられます。VNI から VLAN へのマッピングを実行する前に、すべてのダウンストリーム VNI を設定する必要があります。前のセクションと同様に、まず

[1] MC-LAG 経由で接続された 2 つの BL を使用する場合は、ペアに同じ source-ip と external-ip を使用します

重要なコマンドの簡単な説明を提供し、後で関連するスイッチで必要なコマンドの完全なセットを提供します。

Configuration	Description

`interface Loopback 1`
`  description nve_loopback`
`  ip address 10.101.101.12/32`
`  exit`
	Assign loopback IP address for VTEP to handle internal VxLAN tunnel

`interface Loopback 2`
`  description "Multisite External VTEP IP"`
`  ip address 10.111.111.12/32`
`  exit`
	Assign loopback IP address for VTEP to handle external VxLAN tunnel

`interface vlan 3101`
`  description "Vlan for VNI to VRF mapping"`
`  ip vrf forwarding VrfTenant1`
	Assign dedicated VLAN for L3 VNI for each vrf

`interface vxlan vtep12`
`  source-ip 10.101.101.12`
`  external-ip 10.111.111.12`
 	
`  vni-downstream 10.211.211.12`
 	
`  map vni 10101 vlan 101`
`  map vni 10201 vlan 201`
`  map vni 103101 vlan 3101`
`  map vni 103101 vrf VrfTenant1`
`  map vni 103102 vlan 3102`
`  map vni 103102 vrf VrfTenant2`
`  exit`
`end`
	Assign VTEP interface using Loopback1 IP address
	Assign external-ip for handling external tunnels using Loopback2 IP address. (For BL MC-LAG peer configure same ip address)
	
	Downstream vni feature can be enabled for external or specific VTEPs. If specific VTEP IP is used for MC-LAG PIP use case configure vni-downstream <PIP IP address> i.e Loopback0 ip address
	
	Map each stretched VLAN to an L2 VNI
	
	Map each L3 VNI to an intermediate VLAN.
	Map each L3 VNI to a single VRF

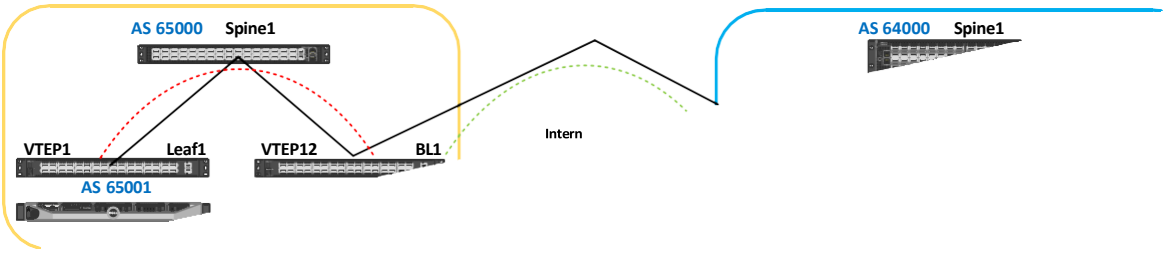

図5. 内部および外部トンネル、スプリットホライズンの作成

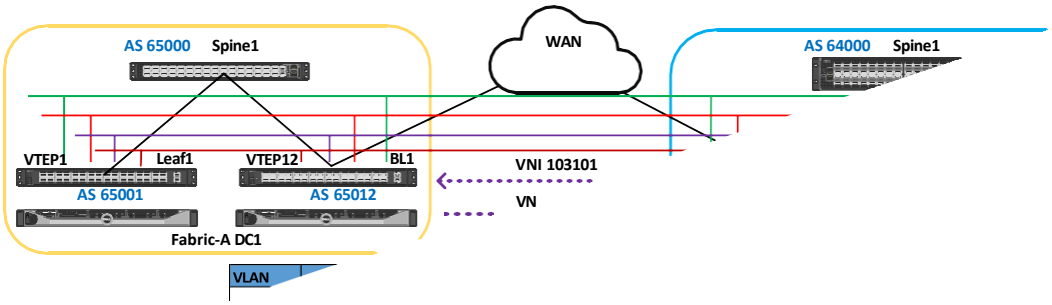

図6. VLAN から VNI へのマッピング

Fabric-A-Leaf1	Fabric-A-BL1
configure terminal interface Loopback 1 description nve_loopback ip address 10.101.101.1/32 exit interface vlan 3101 description "Vlan for VNI to VRF mapping" ip vrf forwarding VrfTenant1 interface vlan 3102 description "Vlan for VNI to VRF mapping" ip vrf forwarding VrfTenant2 exit interface vxlan vtep1 source-ip 10.101.101.1 map vni 10101 vlan 101 map vni 10201 vlan 201 map vni 103101 vlan 3101 map vni 103101 vrf VrfTenant1 map vni 103102 vlan 3102 map vni 103102 vrf VrfTenant2 exit end write memory	configure terminal interface Loopback 1 description nve_loopback ip address 10.101.101.12/32 exit **interface Loopback 2** **description "Multisite External VTEP IP"** **ip address 10.111.111.12/32** **exit** interface vlan 3101 description "Vlan for VNI to VRF mapping" ip vrf forwarding VrfTenant1 interface vlan 3102 description "Vlan for VNI to VRF mapping" ip vrf forwarding VrfTenant2 exit interface vxlan vtep12 source-ip 10.101.101.12 **external-ip 10.111.111.12** **vni-downstream external** map vni 10101 vlan 101 map vni 10201 vlan 201 map vni 103101 vlan 3101 map vni 103101 vrf VrfTenant1 map vni 103102 vlan 3102 map vni 103102 vrf VrfTenant2 exit end write memory

次のコマンドは、Fabric-A-Leaf1 からの出力を提供します。

```
Fabric-A-Leaf1# show vxlan tunnel

        Name                SIP                DIP           source    Group     D-VNI     operstatus
        ====                ===                ===           ======    =====     =====     ==========
 EVPN_10.101.101.12      10.101.101.1      10.101.101.12       EVPN    internal     no        oper_up
Fabric-A-Leaf1#
```

```
Fabric-A-Leaf1# show vxlan interface

VTEP Name              : vtep1
VTEP Source IP         : 10.101.101.1
EVPN NVO Name          : nvo1
EVPN VTEP              : vtep1
Source Interface       : Loopback1
Primary IP Interface  : Not Configured
External IP Interface : Not Configured
Fabric-A-Leaf1#
```

```
Fabric-A-Leaf1# show bgp l2vpn evpn vni 10101
 VNI: 10101
  Type: L2
  RD: 10.0.1.1:101
  Originator IP: 10.101.101.1
  Originator External IP: 0.0.0.0
  Mcast group: 0.0.0.0
  Advertise-gw-macip:
  Advertise-svi-macip:
  Import Route Target:
   65001:10101
  Export Route Target:
   65001:10101
Fabric-A-Leaf1#
```

```
Fabric-A-Leaf1# show bgp l2vpn evpn vni 103101
 VNI: 103101
  Type: L3
  RD: 10.0.1.1:5096
  Originator IP: 10.101.101.1
  Originator External IP: 0.0.0.0
  Mcast group:
  Advertise-gw-macip:
  Advertise-svi-macip:
  Advertise-pip: True
  System-IP: 10.0.1.1
  System-MAC: 3c:2c:30:66:87:82
  Router-MAC: 3c:2c:30:66:87:82
  Import Route Target:
   65001:103101
  Export Route Target:
   65001:103101
Fabric-A-Leaf1#
```

次に示すように、ファブリック B にも同じ設定セットが必要です。

Fabric-B-Leaf1	Fabric-B-BL1
configure terminal interface Loopback 1 description nve_loopback ip address 10.201.201.1/32 exit interface vlan 3101 description "Vlan for VNI to VRF mapping" ip vrf forwarding VrfTenant1 interface vlan 3102 description "Vlan for VNI to VRF mapping" ip vrf forwarding VrfTenant2 exit interface vxlan vtep1 source-ip 10.201.201.1 map vni 20101 vlan 101 map vni 20201 vlan 201 map vni 203101 vlan 3101 map vni 203101 vrf VrfTenant1 map vni 203102 vlan 3102 map vni 203102 vrf VrfTenant2 exit end write memory	configure terminal interface Loopback 1 description nve_loopback ip address 10.201.201.12/32 exit **interface Loopback 2** **description "Multisite External VTEP IP"** **ip address 10.211.211.12/32** **exit** interface vlan 3101 description "Vlan for VNI to VRF mapping" ip vrf forwarding VrfTenant1 interface vlan 3102 description "Vlan for VNI to VRF mapping" ip vrf forwarding VrfTenant2 exit interface vxlan vtep12 source-ip 10.201.201.12 **external-ip 10.211.211.12** **vni-downstream external** map vni 20101 vlan 101 map vni 20201 vlan 201 map vni 203101 vlan 3101 map vni 203101 vrf VrfTenant1 map vni 203102 vlan 3102 map vni 203102 vrf VrfTenant2 exit end write memory

BGP DCI 構成

外部 DCI との BGP ピアリングは、マルチサイトでのネクストホップ書き換えのためにファブリック外部ピアリングで設定する必要があります。マルチサイト展開には fabric-external コマンドを使用することを推奨します。L2 VNI および L3 VNI のルートターゲット設定コマンドは、アドレス ファミリ L2VPN EVPN で設定されます。マルチサイトの BLは、手動RT設定を使用して外部VTEPをインポートする必要があります。Auto-RT はデフォルトで有効になっていますが、ユーザーが手動 RT 自動 RT を設定した場合は非アクティブにすることができます。次の表に、これらのコマンドの説明と、関連するスイッチで必要なコマンドの完全なリストを示します。

Configuration	Description
peer-group external remote-as external capability extended-nexthop ! address-family ipv4 unicast activate ! address-family l2vpn evpn activate fabric-external	Peer with external fabric neighbor Advertise underlay networks with external neighbor Advertise evpn routes with external peer
address-family l2vpn evpn advertise-all-vni ! vni 10101 route-target both auto route-target import 20101:101 route-target export 10101:101	Specify L2 VNI route-targets The VNI mapping is not symmetric, use auto rt for internal and manual RT for external to exchange routes RT for importing routes from external fabric i.e., Fabric-B-DC2 RT for exporting the local routes to external fabric i.e., Fabric-B-DC2

	Make sure these numbers are unique per VNI
`router bgp 65012 vrf VrfTenant1` `  router-id 10.0.1.12`	Configure BGP router for Tenant
`address-family ipv4 unicast` `  redistribute connected`	Advertise underlay networks and VTEPs

`address-family l2vpn evpn`
`  advertise ipv4 unicast`
`  default-originate ipv4`
`  rd 65012:1`
`  route-target both auto`
`  route-target import 203101:1`
`  route-target export 103101:1`
	Advertise all VNIs on overlay for Tenant
	Advertise default route to internal fabric
	Specify L3 route-targets
	RD should be unique per tenant/vrf
	Auto rt for route exchange btw internal vteps
	Manual rt for route exchange with downstream fabric i.e., Fabric-B-DC2

Fabric-A-BL1

```
configure terminal

interface Ethernet44
 description "Connected to Fabric B BL1"
 ipv6 enable
 no shutdown
 exit
router bgp 65012
 address-family l2vpn evpn
  advertise-all-vni
  !
  vni 10101
   route-target both auto
   route-target import 20101:101
   route-target export 10101:101
   exit
  vni 10201
   route-target both auto
   route-target import 20201:201
   route-target export 10201:201
   exit
  exit
 peer-group external
  remote-as external
  capability extended-nexthop
  !
  address-family ipv4 unicast
   activate
  !
  address-family l2vpn evpn
   activate
   fabric-external
neighbor interface Ethernet44
 description "DCI Multisite Neighbor"
 peer-group external
 end
```

Fabric-A-Leaf1	Fabric-A-BL1

configure terminal
router bgp 65001 vrf VrfTenant1
 router-id 10.0.1.1
 !
 address-family ipv4 unicast
  redistribute connected
  maximum-paths 128
 !
 address-family l2vpn evpn
  advertise ipv4 unicast
  exit
 exit
!
router bgp 65001 vrf VrfTenant2
 router-id 10.0.1.1
 !
 address-family ipv4 unicast
  redistribute connected
  maximum-paths 128
 !
 address-family l2vpn evpn
  advertise ipv4 unicast
  exit
 exit
 end
write memory
	configure terminal
	router bgp 65012 vrf VrfTenant1
	 router-id 10.0.1.12
	 !
	 address-family ipv4 unicast
	  redistribute connected
	  maximum-paths 128
	 !
	 address-family l2vpn evpn
	  advertise ipv4 unicast
	  default-originate ipv4
	  rd 65012:1
	  route-target both auto
	  route-target import 203101:1
	  route-target export 103101:1
	  exit
	 exit
	!
	router bgp 65012 vrf VrfTenant2
	 router-id 10.0.1.12
	 !
	 address-family ipv4 unicast
	  redistribute connected
	  maximum-paths 128
	 !
	 address-family l2vpn evpn
	  advertise ipv4 unicast
	  default-originate ipv4
	  rd 65012:2
	  route-target both auto
	  route-target import 203102:1
	  route-target export 103102:1
	 end
	write memory

Fabric-B-BL1

```
configure terminal

interface Ethernet92
 description "Connected to Fabric B BL1"
  ipv6 enable
 no shutdown
 exit
router bgp 64612
 address-family l2vpn evpn
  advertise-all-vni
  !
  vni 20101
   route-target both auto
   route-target import 10101:101
   route-target export 20101:101
   exit
  !
  vni 20201
   route-target both auto
   route-target import 10201:201
   route-target export 20201:201
   exit
  exit
 peer-group external
  remote-as external
  capability extended-nexthop
  !
  address-family ipv4 unicast
   activate
  !
  address-family l2vpn evpn
   activate
   fabric-external
neighbor interface Ethernet92
 description "DCI Multisite Neighbor"
 peer-group external
 end
write memory
```

Fabric-B-Leaf1	Fabric-B-BL1

`configure terminal`
 	
`router bgp 64601 vrf VrfTenant1`
`  router-id 10.0.2.1`
`  !`
`  address-family ipv4 unicast`
`  redistribute connected`
`  maximum-paths 128`
`  !`
`  address-family l2vpn evpn`
`  advertise ipv4 unicast`
`  exit`
`  exit`
`!`
`router bgp 64601 vrf VrfTenant2`
`  router-id 10.0.2.11`
`  !`
`  address-family ipv4 unicast`
`  redistribute connected`
`  maximum-paths 128`
`  !`
`  address-family l2vpn evpn`
`  advertise ipv4 unicast`
`  exit`
`  exit`
`  end`
`write memory`
	`configure terminal`
	
	`router bgp 64612 vrf VrfTenant1`
	`  router-id 10.0.2.12`
	`  !`
	`  address-family ipv4 unicast`
	`  redistribute connected`
	`  maximum-paths 128`
	`  !`
	`  address-family l2vpn evpn`
	`  advertise ipv4 unicast`
	`  default-originate ipv4`
	`  **rd 64612:1**`
	`  **route-target both auto**`
	`  **route-target import 103101:1**`
	`  **route-target export 203101:1**`
	`  exit`
	`  exit`
	`!`
	`router bgp 64612 vrf VrfTenant2`
	`  router-id 10.0.2.12`
	`  !`
	`  address-family ipv4 unicast`
	`  redistribute connected`
	`  maximum-paths 128`
	`  !`
	`  address-family l2vpn evpn`
	`  advertise ipv4 unicast`
	`  default-originate ipv4`
	`  **rd 64612:2**`
	`  **route-target both auto**`
	`  **route-target import 103102:1**`
	`  **route-target export 203102:1**`
	`  exit`
	`  exit`
	`  end`
	`write memory`

Show command output from Fabric-A-BL1

次のコマンドを使用して、Fabric-Aの境界リーフ(BL1)の状態を確認します。

```
Fabric-A-BL1# show vxlan interface

VTEP Name              : vtep12
VTEP Source IP         : 10.101.101.12
VTEP External IP       : 10.111.111.12
EVPN NVO Name          : nvo1
EVPN VTEP              : vtep12
Source Interface       : Loopback1
External IP Interface  : Loopback2
Primary IP Interface   : Not Configured
Fabric-A-BL1#
```

```
Fabric-A-BL1# show bgp l2vpn evpn vni 10101
 VNI: 10101
  Type: L2
  RD: 10.0.1.12:101
  Originator IP: 10.101.101.12
  Originator External IP: 10.111.111.12
  Mcast group: 0.0.0.0
  Advertise-gw-macip:
  Advertise-svi-macip:
  Import Route Target:
   20101:101
   65012:10101
  Export Route Target:
   10101:101
   65012:10101
Fabric-A-BL1#
```

```
Fabric-A-BL1# show bgp l2vpn evpn vni 103101
 VNI: 103101
  Type: L3
  RD: 65012:1
  Originator IP: 10.101.101.12
  Originator External IP: 10.111.111.12
  Mcast group:
  Advertise-gw-macip:
  Advertise-svi-macip:
  Advertise-pip: True
  System-IP: 10.0.1.12
  System-MAC: 3c:2c:30:66:71:04
  Router-MAC: 3c:2c:30:66:71:04
  Import Route Target:
   203101:1
   65012:103101
  Export Route Target:
   103101:1
   65012:103101
Fabric-A-BL1#
```

```
Fabric-A-BL1# show bgp ipv4 unicast neighbors interface Ethernet 44

BGP neighbor is Ethernet44, remote AS 64612, local AS 65012, external link
  BGP version 4, remote router ID 10.0.2.12 , local router ID 10.0.1.12
  BGP state = Established, up for 05:07:29
  Last read 00:00:28, Last write 00:00:29
  Hold time is 180 seconds, keepalive interval is 60 seconds
  Minimum time between advertisement runs is 0 seconds
  Neighbor capabilities:
    4 Byte AS: advertised and received
    AddPath: advertised and received
    Route refresh: advertised and received
    Multiprotocol Extension: advertised and received
    Graceful restart: advertised and received
  Message statistics:
    InQ depth is 0
    OutQ depth is 0
                         Sent       Rcvd
    Opens:               1          1
    Notifications:       0          0
    Updates:             62         62
    Keepalive:           308        308
    Route Refresh:       0          0
    Capability:          0          0
    Total:               371        371

  For address family: IPv4 Unicast
    Address-family enabled
    Prefixes received 6
  For address family: L2VPN EVPN
    Address-family enabled
    Prefixes received 9
    Fabric-external
  Connections established 1, dropped 0
  Last reset 05:09:06, Last reset reason Waiting for peer OPEN
  Local host: fe80::3e2c:30ff:fe66:7104, Local port: 60028
  Foreign host: fe80::3e2c:30ff:fe72:c504, Foreign port: 179
  BGP Connect Retry Timer in Seconds 30
Fabric-A-BL1#
```

```
Fabric-A-BL1# show vxlan tunnel

        Name                SIP                DIP           source    Group     D-VNI     operstatus
        ====                ===                ===           ======    =====     =====     ==========
 EVPN_10.101.101.1      10.101.101.12      10.101.101.1       EVPN    internal    no        oper_up
 EVPN_10.211.211.12     10.111.111.12     10.211.211.12       EVPN    external    yes       oper_up
Fabric-A-BL1#
```

```
Fabric-A-BL1# show vxlan remote vni

   Vlan        Tunnel        Group      VNI
   ====        ======        =====      ===
 Vlan101     10.101.101.1   internal   10101
 Vlan101    10.211.211.12   external   20101
 Vlan201     10.101.101.1   internal   10201
 Vlan201    10.211.211.12   external   20201
Fabric-A-BL1#
```

```
Fabric-A-BL1# show vxlan remote mac

   Vlan            Mac              Type        Tunnel        Group      VNI
   ====            ===              ====        ======        =====      ===
 Vlan101    00:0c:29:00:31:88     dynamic   10.211.211.12    external   20101
 Vlan101    00:0c:29:04:53:ef     dynamic    10.101.101.1    internal   10101
 Vlan101    00:0c:29:fa:0e:a3     dynamic    10.101.101.1    internal   10101
 Vlan101    00:11:22:bb:00:ff     dynamic    10.101.101.1    internal   10101
 Vlan101    00:50:56:52:93:ff     dynamic   10.211.211.12    external   20101
 Vlan101    00:50:56:59:59:71     dynamic    10.101.101.1    internal   10101
 Vlan101    00:50:56:89:22:ec     dynamic   10.211.211.12    external   20101
 Vlan101    68:4f:64:bf:ab:76     dynamic   10.211.211.12    external   20101
 Vlan201    00:0c:29:4c:8f:40     dynamic    10.101.101.1    internal   10201
 Vlan201    00:0c:29:7c:8e:34     dynamic    10.101.101.1    internal   10201
 Vlan201    00:0c:29:bc:2f:a9     dynamic    10.101.101.1    internal   10201
Fabric-A-BL1#
```

```
Fabric-A-BL1# show mac address-table
-------------------------------------------------------------
VLAN          MAC-ADDRESS          TYPE          INTERFACE
-------------------------------------------------------------
101          00:0C:29:00:31:88    DYNAMIC       VxLAN DIP: 10.211.211.12
101          00:0C:29:04:53:EF    DYNAMIC       VxLAN DIP: 10.101.101.1
201          00:0C:29:4C:8F:40    DYNAMIC       VxLAN DIP: 10.101.101.1
101          00:0C:29:52:9D:0E    DYNAMIC       Ethernet16
101          00:0C:29:54:6E:26    DYNAMIC       Ethernet16
201          00:0C:29:5B:3A:F4    DYNAMIC       VxLAN DIP: 10.101.101.1
201          00:0C:29:7C:8E:34    DYNAMIC       VxLAN DIP: 10.101.101.1
201          00:0C:29:BC:2F:A9    DYNAMIC       VxLAN DIP: 10.101.101.1
201          00:0C:29:F4:3E:A4    DYNAMIC       VxLAN DIP: 10.101.101.1
101          00:0C:29:FA:0E:A3    DYNAMIC       VxLAN DIP: 10.101.101.1
101          00:11:22:BB:00:FF    DYNAMIC       VxLAN DIP: 10.101.101.1
101          00:50:56:52:93:FF    DYNAMIC       VxLAN DIP: 10.211.211.12
101          00:50:56:59:59:71    DYNAMIC       VxLAN DIP: 10.101.101.1
101          00:50:56:89:00:E9    DYNAMIC       VxLAN DIP: 10.211.211.12
101          00:50:56:89:22:EC    DYNAMIC       VxLAN DIP: 10.211.211.12
101          68:4F:64:BF:AB:76    DYNAMIC       VxLAN DIP: 10.211.211.12
Fabric-A-BL1#
```

```
Fabric-A-BL1# show ip arp vrf VrfTenant1
Type: R - Remote Neighbor entries (EVPN or MC-LAG Separate IP)
-----------------------------------------------------------------------------------------------
Address              Hardware address    Interface            Egress Interface           Type
-----------------------------------------------------------------------------------------------
10.101.101.1         3c:2c:30:66:87:82   Vlan3101             -                          Static(R)
10.211.211.12        3c:2c:30:72:c5:04   Vlan3101             -                          Static(R)
192.168.10.1         00:0c:29:04:53:ef   Vlan101              VxLAN DIP: 10.101.101.1    Static(R)
192.168.50.1         00:50:56:89:22:ec   Vlan101              VxLAN DIP: 10.211.211.12   Static(R)
Fabric-A-BL1#
```

```
Fabric-A-BL1# show ip route vrf VrfTenant1

Codes:  K - kernel route, C - connected, S - static, B - BGP, O - OSPF
        > - selected route, * - FIB route, q - queued route, r - rejected route, # - not installed in
hardware
       Destination         Gateway
Dist/Metric   Uptime
-----------------------------------------------------------------------------------------------------
---------------
 B>*   0.0.0.0/0           via 10.211.211.12               Vlan3101                                  20/0
05:44:06
 C>*   192.168.10.0/24     Direct                          Vlan101                                   0/0
05:46:46
 B>*   192.168.10.1/32     via 10.101.101.1                Vlan3101                                  20/0
05:45:59
 B>*   192.168.50.0/24     via 10.211.211.12               Vlan3101                                  20/0
05:44:06
 B>*   192.168.50.1/32     via 10.211.211.12               Vlan3101                                  20/0
00:16:56
Fabric-A-BL1#
```

ファブリック B-DC2 からファブリック A-DC1 への ping

ping を使用して 2 つのサイトの接続をテストする前に、次のコマンドを使用して、ファブリック B の Leaf1(Fabric-B-Leaf1)にあるファブリック A のホスト VM のタイプ 2 MAC IP プレフィックスを一覧表示します。

```
Fabric-B-Leaf1# show bgp l2vpn evpn route type macip
BGP table version is 18, local router ID is 10.0.2.1
Status codes: s suppressed, d damped, h history, * valid, > best, i - internal
Origin codes: i - IGP, e - EGP, ? - incomplete
EVPN type-1 prefix: [1]:[ESI]:[EthTag]:[IPlen]:[VTEP-IP]
EVPN type-2 prefix: [2]:[EthTag]:[MAClen]:[MAC]:[IPlen]:[IP]
EVPN type-3 prefix: [3]:[EthTag]:[IPlen]:[OrigIP]
EVPN type-4 prefix: [4]:[ESI]:[IPlen]:[OrigIP]
EVPN type-5 prefix: [5]:[EthTag]:[IPlen]:[IP]
   Network          Next Hop            Metric LocPrf Weight Path
                    Extended Community
Route Distinguisher: 10.0.2.12:101
*>   [2]:[0]:[48]:[00:0c:29:04:53:ef]
                    10.201.201.12                                    0 64600 64612 65012 65000 65001 i
                    RT:20101:101 RT:64612:20101 ET:8
*>   [2]:[0]:[48]:[00:0c:29:04:53:ef]:[32]:[192.168.10.1]
                    10.201.201.12                                    0 64600 64612 65012 65000 65001 i
                    RT:20101:101 RT:64612:20101 RT:64612:203101 RT:203101:1 ET:8 Rmac:3c:2c:30:72:c5:04
```

次のコマンドを使用して、ファブリック B(ファブリック B-BL1)の境界リーフ(BL1)にあるファブリック A のホスト VM のタイプ 2 MAC IP プレフィックスを一覧表示します。

```
Fabric-B-BL1# show bgp l2vpn evpn route type macip
BGP table version is 27, local router ID is 10.0.2.12
Status codes: s suppressed, d damped, h history, * valid, > best, i - internal
Origin codes: i - IGP, e - EGP, ? - incomplete
EVPN type-1 prefix: [1]:[ESI]:[EthTag]:[IPlen]:[VTEP-IP]
EVPN type-2 prefix: [2]:[EthTag]:[MAClen]:[MAC]:[IPlen]:[IP]
EVPN type-3 prefix: [3]:[EthTag]:[IPlen]:[OrigIP]
EVPN type-4 prefix: [4]:[ESI]:[IPlen]:[OrigIP]
EVPN type-5 prefix: [5]:[EthTag]:[IPlen]:[IP]
   Network          Next Hop            Metric LocPrf Weight Path
                    Extended Community
Route Distinguisher: 10.0.1.12:101
*>   [2]:[0]:[48]:[00:0c:29:04:53:ef]
                    10.111.111.12                                    0 65012 65000 65001 i
                    RT:10101:101 RT:65012:10101 ET:8
*>   [2]:[0]:[48]:[00:0c:29:04:53:ef]:[32]:[192.168.10.1]
                    10.111.111.12                                    0 65012 65000 65001 i
                    RT:10101:101 RT:65012:10101 RT:65012:103101 RT:103101:1 ET:8 Rmac:3c:2c:30:66:71:04
Route Distinguisher: 10.0.2.12:101
*>   [2]:[0]:[48]:[00:0c:29:04:53:ef]
                    10.201.201.12                            32768 65012 65000 65001 i
                    ET:8 RT:20101:101 RT:64612:20101
*>   [2]:[0]:[48]:[00:0c:29:04:53:ef]:[32]:[192.168.10.1]
                    10.201.201.12                            32768 65012 65000 65001 i
                    ET:8  RT:20101:101  RT:64612:20101  RT:203101:1  RT:64612:203101  Rmac:3c:2c:30:72:c5:04
```

Fabric-A-BL1 のファブリック A のホスト VM のタイプ 2 MAC IP プレフィックスを一覧表示します。

```
Fabric-A-BL1# show bgp l2vpn evpn route type macip
BGP table version is 6, local router ID is 10.0.1.12
Status codes: s suppressed, d damped, h history, * valid, > best, i - internal
Origin codes: i - IGP, e - EGP, ? - incomplete
EVPN type-1 prefix: [1]:[ESI]:[EthTag]:[IPlen]:[VTEP-IP]
EVPN type-2 prefix: [2]:[EthTag]:[MAClen]:[MAC]:[IPlen]:[IP]
EVPN type-3 prefix: [3]:[EthTag]:[IPlen]:[OrigIP]
EVPN type-4 prefix: [4]:[ESI]:[IPlen]:[OrigIP]
EVPN type-5 prefix: [5]:[EthTag]:[IPlen]:[IP]
   Network          Next Hop            Metric LocPrf Weight Path
                    Extended Community
Route Distinguisher: 10.0.1.1:101
*>   [2]:[0]:[48]:[00:0c:29:04:53:ef]
                    10.101.101.1                                   0 65000 65001 i
                    RT:65001:10101 ET:8
*>   [2]:[0]:[48]:[00:0c:29:04:53:ef]:[32]:[192.168.10.1]
                    10.101.101.1                                   0 65000 65001 i
                    RT:65001:10101 RT:65001:103101 ET:8 Rmac:3c:2c:30:66:87:82
Route Distinguisher: 10.0.1.12:101
*>   [2]:[0]:[48]:[00:0c:29:04:53:ef]
                    10.101.101.12                             32768 65000 65001 i
                    ET:8 RT:10101:101 RT:65012:10101
*>   [2]:[0]:[48]:[00:0c:29:04:53:ef]:[32]:[192.168.10.1]
                    10.101.101.12                             32768 65000 65001 i
                    ET:8 RT:10101:101 RT:65012:10101 RT:103101:1 RT:65012:103101 Rmac:3c:2c:30:66:71:04
```

Fabric-A-Leaf1 のファブリック A のホスト VM のタイプ 2 MAC IP プレフィックスを一覧表示します。

```
Fabric-A-Leaf1# show bgp l2vpn evpn route type macip
BGP table version is 6, local router ID is 10.0.1.1
Status codes: s suppressed, d damped, h history, * valid, > best, i - internal
Origin codes: i - IGP, e - EGP, ? - incomplete
EVPN type-1 prefix: [1]:[ESI]:[EthTag]:[IPlen]:[VTEP-IP]
EVPN type-2 prefix: [2]:[EthTag]:[MAClen]:[MAC]:[IPlen]:[IP]
EVPN type-3 prefix: [3]:[EthTag]:[IPlen]:[OrigIP]
EVPN type-4 prefix: [4]:[ESI]:[IPlen]:[OrigIP]
EVPN type-5 prefix: [5]:[EthTag]:[IPlen]:[IP]
   Network          Next Hop            Metric LocPrf Weight Path
                    Extended Community
Route Distinguisher: 10.0.1.1:101
*>   [2]:[0]:[48]:[00:0c:29:04:53:ef]
                    10.101.101.1                              32768 i
                    ET:8 RT:65001:10101
*>   [2]:[0]:[48]:[00:0c:29:04:53:ef]:[32]:[192.168.10.1]
                    10.101.101.1                              32768 i
                    ET:8 RT:65001:10101 RT:65001:103101 Rmac:3c:2c:30:66:87:82
```

注:他のプレフィックスの出力は省略されています。

最後に、ファブリック B のホストからファブリック A のホストへの ping を使用して接続を確認します

```
R1S1-VM101                                                    Actions
1008 bytes from 192.168.10.1: icmp_seq=4738 ttl=60 time=0.268 ms
1008 bytes from 192.168.10.1: icmp_seq=4739 ttl=60 time=0.350 ms
1008 bytes from 192.168.10.1: icmp_seq=4740 ttl=60 time=0.270 ms
1008 bytes from 192.168.10.1: icmp_seq=4741 ttl=60 time=0.312 ms
1008 bytes from 192.168.10.1: icmp_seq=4742 ttl=60 time=0.303 ms
1008 bytes from 192.168.10.1: icmp_seq=4743 ttl=60 time=0.311 ms
^C
--- 192.168.10.1 ping statistics ---
1315463 packets transmitted, 1293115 received, +17060 duplicates, +940 errors, 1.69887% packet loss,
 time 21663717ms
rtt min/avg/max/mdev = 0.089/0.290/84.297/0.137 ms, pipe 6
root@DC2-R1S1-VM101 [ ~ ]#
root@DC2-R1S1-VM101 [ ~ ]# ifconfig eth0
eth0      Link encap:Ethernet  HWaddr 00:50:56:89:22:ec
          inet addr:192.168.50.1  Bcast:192.168.50.255  Mask:255.255.255.0
          inet6 addr: fe80::250:56ff:fe89:22ec/64 Scope:Link
          UP BROADCAST RUNNING MULTICAST  MTU:1500  Metric:1
          RX packets:2503734 errors:0 dropped:40 overruns:0 frame:0
          TX packets:4876791 errors:0 dropped:0 overruns:0 carrier:0
          collisions:0 txqueuelen:1000
          RX bytes:2044334434 (2.0 GB)  TX bytes:4677284576 (4.6 GB)

root@DC2-R1S1-VM101 [ ~ ]# ping 192.168.10.1 -s 1000 -c 5
PING 192.168.10.1 (192.168.10.1) 1000(1028) bytes of data.
1008 bytes from 192.168.10.1: icmp_seq=1 ttl=60 time=0.516 ms
1008 bytes from 192.168.10.1: icmp_seq=2 ttl=60 time=0.410 ms
1008 bytes from 192.168.10.1: icmp_seq=3 ttl=60 time=0.399 ms
1008 bytes from 192.168.10.1: icmp_seq=4 ttl=60 time=0.488 ms
1008 bytes from 192.168.10.1: icmp_seq=5 ttl=60 time=0.508 ms

--- 192.168.10.1 ping statistics ---
5 packets transmitted, 5 received, 0% packet loss, time 4007ms
rtt min/avg/max/mdev = 0.399/0.464/0.516/0.049 ms
root@DC2-R1S1-VM101 [ ~ ]# ip neigh show
192.168.50.2 dev eth0  FAILED
192.168.50.254 dev eth0 lladdr 00:22:22:22:22:22 DELAY
root@DC2-R1S1-VM101 [ ~ ]# _
```

図7. ファブリック **B** のホストからファブリック **A** のホストへの **ping** 出力

ファブリック A-DC1 からファブリック B-DC2 への ping

同様に、ファブリック A からファブリック B への ping をテストする前に、次のコマンドを使用して、ファブリック A-Leaf1 のファブリック B のホスト VM のタイプ 2 MAC IP プレフィックスを表示します。

```
Fabric-A-Leaf1# show bgp l2vpn evpn route type macip
BGP table version is 6, local router ID is 10.0.1.1
Status codes: s suppressed, d damped, h history, * valid, > best, i - internal
Origin codes: i - IGP, e - EGP, ? - incomplete
EVPN type-1 prefix: [1]:[ESI]:[EthTag]:[IPlen]:[VTEP-IP]
EVPN type-2 prefix: [2]:[EthTag]:[MAClen]:[MAC]:[IPlen]:[IP]
EVPN type-3 prefix: [3]:[EthTag]:[IPlen]:[OrigIP]
EVPN type-4 prefix: [4]:[ESI]:[IPlen]:[OrigIP]
EVPN type-5 prefix: [5]:[EthTag]:[IPlen]:[IP]
   Network          Next Hop            Metric LocPrf Weight Path
                    Extended Community
Route Distinguisher: 10.0.1.12:101
*>   [2]:[0]:[48]:[00:50:56:89:22:ec]
                    10.101.101.12                                    0 65000 65012 64612 64600 64601 i
                    RT:10101:101 RT:65012:10101 ET:8
*>   [2]:[0]:[48]:[00:50:56:89:22:ec]:[32]:[192.168.50.1]
                    10.101.101.12                                    0 65000 65012 64612 64600 64601 i
                    RT:10101:101 RT:65012:10101 RT:65012:103101 RT:103101:1 ET:8 Rmac:3c:2c:30:66:71:04
```

次のスクリプトでは、ファブリック A-BL1 のファブリック B のホスト VM のタイプ 2 MAC IP プレフィックスについて説明します。

```
Fabric-A-BL1# show bgp l2vpn evpn route type macip
BGP table version is 6, local router ID is 10.0.1.12
Status codes: s suppressed, d damped, h history, * valid, > best, i - internal
Origin codes: i - IGP, e - EGP, ? - incomplete
EVPN type-1 prefix: [1]:[ESI]:[EthTag]:[IPlen]:[VTEP-IP]
EVPN type-2 prefix: [2]:[EthTag]:[MAClen]:[MAC]:[IPlen]:[IP]
EVPN type-3 prefix: [3]:[EthTag]:[IPlen]:[OrigIP]
EVPN type-4 prefix: [4]:[ESI]:[IPlen]:[OrigIP]
EVPN type-5 prefix: [5]:[EthTag]:[IPlen]:[IP]
   Network          Next Hop            Metric LocPrf Weight Path
                    Extended Community
Route Distinguisher: 10.0.1.12:101
*>   [2]:[0]:[48]:[00:50:56:89:22:ec]
                    10.101.101.12                              32768 64612 64600 64601 i
                    ET:8 RT:10101:101 RT:65012:10101
*>   [2]:[0]:[48]:[00:50:56:89:22:ec]:[32]:[192.168.50.1]
                    10.101.101.12                              32768 64612 64600 64601 i
                    ET:8 RT:10101:101 RT:65012:10101 RT:103101:1 RT:65012:103101 Rmac:3c:2c:30:66:71:04
Route Distinguisher: 10.0.2.12:101
*>   [2]:[0]:[48]:[00:50:56:89:22:ec]
                    10.211.211.12                                  0 64612 64600 64601 i
                    RT:20101:101 RT:64612:20101 ET:8
*>   [2]:[0]:[48]:[00:50:56:89:22:ec]:[32]:[192.168.50.1]
                    10.211.211.12                                  0 64612 64600 64601 i
                    RT:20101:101 RT:64612:20101 RT:64612:203101 RT:203101:1 ET:8 Rmac:3c:2c:30:72:c5:04
```

次のスクリプトでは、Fabric-B- BL1 のファブリック B のホスト VM のタイプ 2 MAC IP プレフィックスについて説明します。

```
Fabric-B-BL1# show bgp l2vpn evpn route type macip
BGP table version is 27, local router ID is 10.0.2.12
Status codes: s suppressed, d damped, h history, * valid, > best, i - internal
Origin codes: i - IGP, e - EGP, ? - incomplete
EVPN type-1 prefix: [1]:[ESI]:[EthTag]:[IPlen]:[VTEP-IP]
EVPN type-2 prefix: [2]:[EthTag]:[MAClen]:[MAC]:[IPlen]:[IP]
EVPN type-3 prefix: [3]:[EthTag]:[IPlen]:[OrigIP]
EVPN type-4 prefix: [4]:[ESI]:[IPlen]:[OrigIP]
EVPN type-5 prefix: [5]:[EthTag]:[IPlen]:[IP]
   Network          Next Hop            Metric LocPrf Weight Path
                    Extended Community
Route Distinguisher: 10.0.2.1:101
*>   [2]:[0]:[48]:[00:50:56:89:22:ec]
                    10.201.201.1                                   0 64600 64601 i
                    RT:64601:20101 ET:8
*>   [2]:[0]:[48]:[00:50:56:89:22:ec]:[32]:[192.168.50.1]
                    10.201.201.1                                   0 64600 64601 i
                    RT:64601:20101 RT:64601:203101 ET:8 Rmac:1c:72:1d:de:42:01
Route Distinguisher: 10.0.2.12:101
*>   [2]:[0]:[48]:[00:50:56:89:22:ec]
                    10.201.201.12                              32768 64600 64601 i
                    ET:8 RT:20101:101 RT:64612:20101
*>   [2]:[0]:[48]:[00:50:56:89:22:ec]:[32]:[192.168.50.1]
                    10.201.201.12                              32768 64600 64601 i
                    ET:8 RT:20101:101 RT:64612:20101 RT:203101:1 RT:64612:203101 Rmac:3c:2c:30:72:c5:04
```

次のスクリプトでは、ファブリック B- L1 のファブリック B のホスト VM のタイプ 2 MAC IP プレフィックスについて説明します。

```
Fabric-B-L1# show bgp l2vpn evpn route type macip
BGP table version is 18, local router ID is 10.0.2.1
Status codes: s suppressed, d damped, h history, * valid, > best, i - internal
Origin codes: i - IGP, e - EGP, ? - incomplete
EVPN type-1 prefix: [1]:[ESI]:[EthTag]:[IPlen]:[VTEP-IP]
EVPN type-2 prefix: [2]:[EthTag]:[MAClen]:[MAC]:[IPlen]:[IP]
EVPN type-3 prefix: [3]:[EthTag]:[IPlen]:[OrigIP]
EVPN type-4 prefix: [4]:[ESI]:[IPlen]:[OrigIP]
EVPN type-5 prefix: [5]:[EthTag]:[IPlen]:[IP]
   Network          Next Hop            Metric LocPrf Weight Path
                    Extended Community
Route Distinguisher: 10.0.2.1:101
*>   [2]:[0]:[48]:[00:50:56:89:22:ec]
                    10.201.201.1                           32768 i
                    ET:8 RT:64601:20101
*>   [2]:[0]:[48]:[00:50:56:89:22:ec]:[32]:[192.168.50.1]
                    10.201.201.1                           32768 i
                    ET:8 RT:64601:20101 RT:64601:203101 Rmac:1c:72:1d:de:42:01
```

注:他のプレフィックスの出力は省略されています。

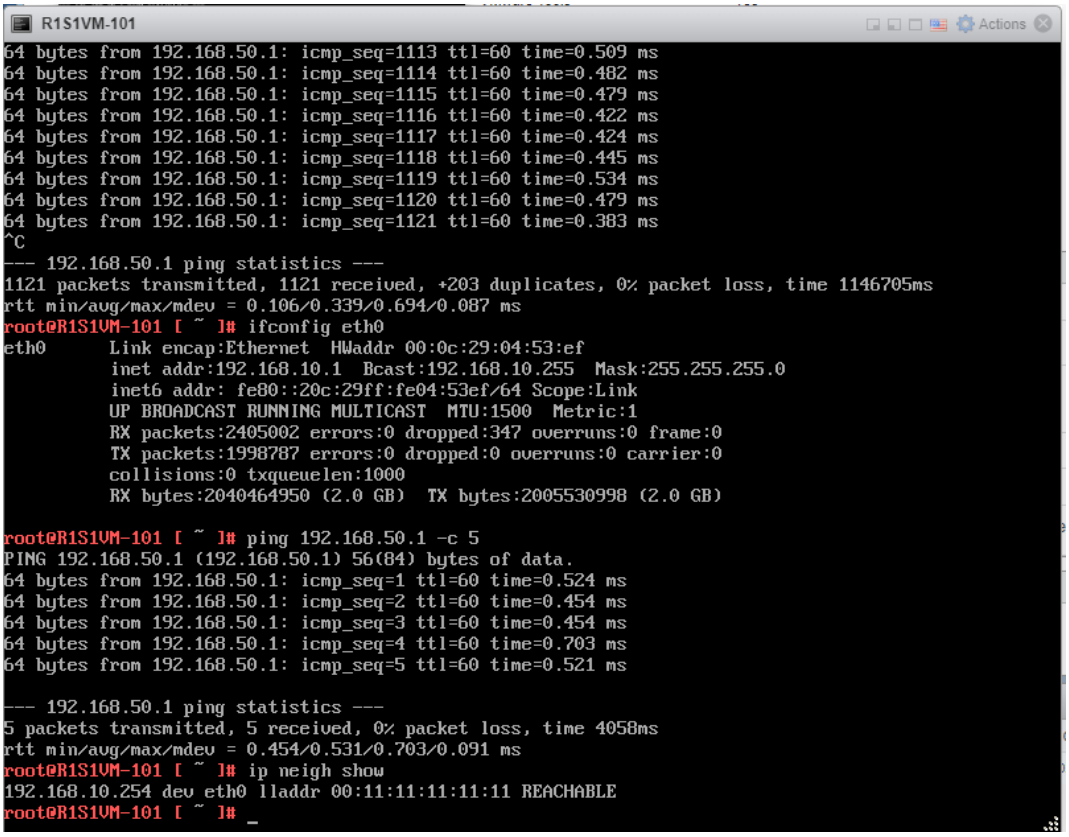

図 8. ファブリック **A** のホストからファブリック **B** のホストへの **ping** 出力

ファブリック B とファブリック A でのパケットキャプチャ

次のセクションでは、ネットワークのさまざまなポイントでのパケットキャプチャを示します。

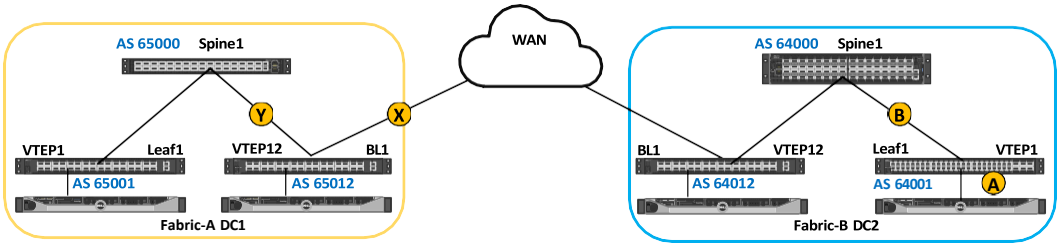

図 9. ネットワーク監視ポイントを使用したネットワークトポロジ

ポイント A でのパケット キャプチャ:

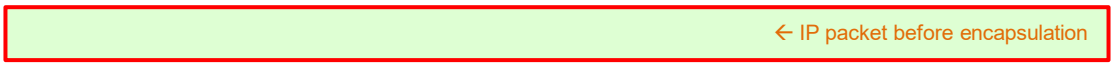

ポイント B でのパケット キャプチャ:

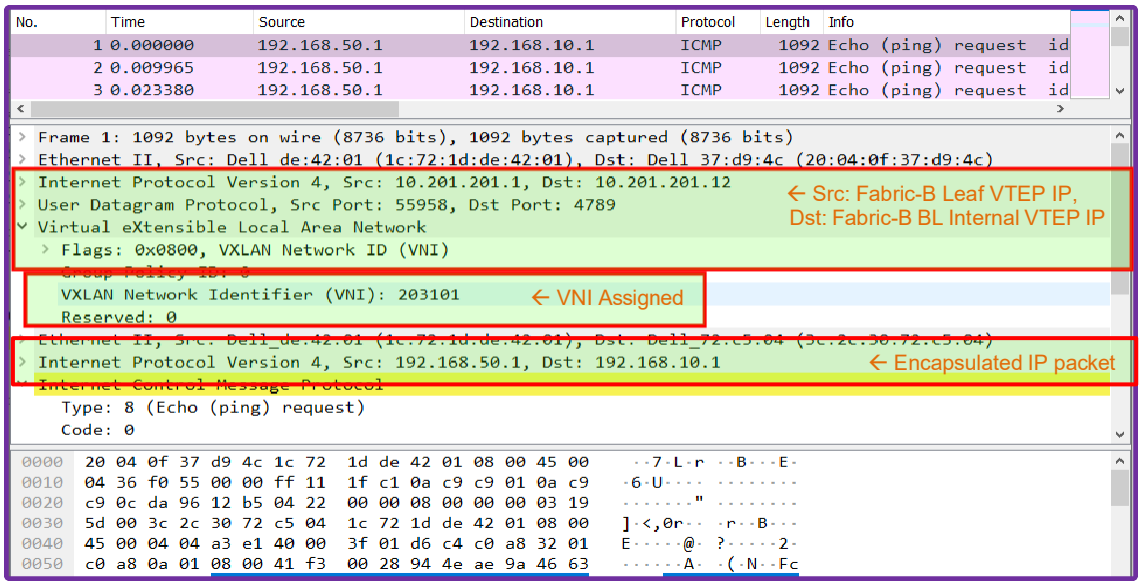

ポイント X でのパケット キャプチャ:

```
No.  Time        Source        Destination   Protocol  Length  Info
   1 0.000000    192.168.50.1  192.168.10.1  ICMP      1092    Echo (ping) request  id
   2 0.014137    192.168.50.1  192.168.10.1  ICMP      1092    Echo (ping) request  id
   3 0.024057    192.168.50.1  192.168.10.1  ICMP      1092    Echo (ping) request  id

> Frame 1: 1092 bytes on wire (8736 bits), 1092 bytes captured (8736 bits)
> Ethernet II, Src: Dell_72:c5:04 (3c:2c:30:72:c5:04), Dst: Dell_66:71:04 (3c:2c:30:66:71:04)
> Internet Protocol Version 4, Src: 10.211.211.12, Dst: 10.111.111.12   ← Src: Fabric-B BL external VTEP IP,
> User Datagram Protocol, Src Port: 55958, Dst Port: 4789                 Dst: Fabric-A BL external VTEP IP
v Virtual eXtensible Local Area Network
  > Flags: 0x0800, VXLAN Network ID (VNI)
    Group Policy ID: 0
    VXLAN Network Identifier (VNI): 103101   ← VNI changed from 203101 to 103101
    Reserved: 0
> Ethernet II, Src: Dell_72:c5:04 (3c:2c:30:72:c5:04), Dst: Dell_66:71:04 (3c:2c:30:66:71:04)
> Internet Protocol Version 4, Src: 192.168.50.1, Dst: 192.168.10.1   ← Encapsulated IP packet
v Internet Control Message Protocol
    Type: 8 (Echo (ping) request)
    Code: 0

0000  3c 2c 30 66 71 04 3c 2c 30 72 c5 04 08 00 45 00   <,0fq·<, 0r····E·
0010  04 36 a6 1f 00 00 ff 11 ba 3c 0a d3 d3 0c 0a 6f   ·6····· ·<·····o
0020  6f 0c da 96 12 b5 04 22 00 00 08 00 00 00 01 92   o·····" ........
0030  bd 00 3c 2c 30 66 71 04 3c 2c 30 72 c5 04 08 00   ··<,0fq· <,0r····
0040  45 00 04 04 54 c6 40 00 3e 01 26 e0 c0 a8 32 01   E···T·@· >·&···2·
0050  c0 a8 0a 01 08 00 8c 35 00 2a 0c 8e 7f 9e 46 63   ·******5 ·*····Fc
0060  00 00 00 00 36 cd 09 00 00 00 00 00 10 11 12 13   ····6··· ........
```

ポイント Y でのパケット キャプチャ:

```
No.  Time        Source        Destination   Protocol  Length  Info
   1 0.000000    192.168.50.1  192.168.10.1  ICMP      1092    Echo (ping) request  id
   2 0.014277    192.168.50.1  192.168.10.1  ICMP      1092    Echo (ping) request  id
   3 0.021440    VMware_89:00:e9  Broadcast  ARP        110    Who has 192.168.60.254?

> Frame 1: 1092 bytes on wire (8736 bits), 1092 bytes captured (8736 bits)
> Ethernet II, Src: Dell_66:71:04 (3c:2c:30:66:71:04), Dst: Dell_fc:13:24 (6c:2b:59:fc:13:24)
> Internet Protocol Version 4, Src: 10.101.101.12, Dst: 10.101.101.1   ← Src: Fabric-A BL Internal VTEP IP,
> User Datagram Protocol, Src Port: 55958, Dst Port: 4789                 Dst: Fabric-A Leaf VTEP IP
v Virtual eXtensible Local Area Network
  > Flags: 0x0800, VXLAN Network ID (VNI)
    Group Policy ID: 0
    VXLAN Network Identifier (VNI): 103101
    Reserved: 0
> Ethernet II, Src: Dell_66:71:04 (3c:2c:30:66:71:04), Dst: Dell_66:87:82 (3c:2c:30:66:87:82)
> Internet Protocol Version 4, Src: 192.168.50.1, Dst: 192.168.10.1   ← Encapsulated IP packet
v Internet Control Message Protocol
    Type: 8 (Echo (ping) request)
    Code: 0

0000  6c 2b 59 fc 13 24 3c 2c 30 66 71 04 08 00 45 00   l+Y··$<, 0fq···E·
0010  04 36 74 c4 00 00 ff 11 64 1b 0a 65 65 0c 0a 65   ·6t····· d··ee··e
0020  65 01 da 96 12 b5 04 22 00 00 08 00 00 00 01 92   e·····" ........
0030  bd 00 3c 2c 30 66 87 82 3c 2c 30 66 71 04 08 00   ··<,0f·· <,0fq···
0040  45 00 04 04 f9 01 40 00 3d 01 83 a4 c0 a8 32 01   E·····@· =·····2·
0050  c0 a8 0a 01 08 00 0f 55 00 2a 51 07 8a 9f 46 63   *******U ·*Q···Fc
```

私たちはあなたのフィードバックを大切にします

デル・テクノロジーズおよびこのドキュメントの作成者は、ソリューションおよびソリューション ドキュメントに関するフィードバックを歓迎します。デル・テクノロジーズのソリューション チームにEメールでお問い合わせください。

著者: Syed Obaid Amin,Vinoth Arumugam

参照

次のドキュメントには、追加情報が記載されています。

Virtual eXtensible Local Area Network(VXLAN):仮想化されたレイヤー 2 ネットワークをレイヤー 3 ネットワーク上にオーバーレイするためのフレームワーク

BGP MPLS ベースのイーサネット VPN

イーサネット VPN(EVPN)での IP プレフィックス アドバタイズメント

イーサネットVPN(EVPN)オーバーレイネットワークの相互接続ソリューション

付録:実行コンフィギュレーション

Fabric A Spine1

```
Spine4# show running-configuration | no-more
!
ip load-share hash ipv4 ipv4-src-ip
ip load-share hash ipv4 ipv4-dst-ip
ip load-share hash ipv4 ipv4-ip-proto
ip load-share hash ipv4 ipv4-l4-dst-port
ip load-share hash ipv4 ipv4-l4-src-port
ip load-share hash ipv6 ipv6-dst-ip
ip  load-share  hash  ipv6  ipv6-src-ip
ip load-share hash ipv6 ipv6-next-hdr
ip load-share hash ipv6 ipv6-l4-dst-port
ip load-share hash ipv6 ipv6-l4-src-port
ssh-server vrf mgmt
mac address-table aging-time 600
kdump enable
kdump memory 0M-2G:256M,2G-4G:256M,4G-8G:384M,8G-:448M
kdump num-dumps 3

core enable
lldp system-name Fabric-A-Spine1
factory default profile l3 confirm
ip vrf mgmt
!
!
nat
 timeout 600
 tcp-timeout 86400
 udp-timeout 300
!
tam
!
qos scheduler-policy copp-scheduler-policy
 !
 queue 0
  type wrr
  weight 1
 !
 queue 1
  meter-type packets
  pir 100
  type wrr
  weight 1
 !
 queue 2
  meter-type packets
  pir 600
  type wrr
  weight 2
 !
 queue 3
  meter-type packets
  pir 8000
  type wrr
  weight 1
 !
 queue 4
  meter-type packets
  pir 500
  type wrr
  weight 1
 !
 queue 6
  meter-type packets
  pir 2000
  type wrr
  weight 2
```

```
!
queue 7
 meter-type packets
 pir 6000
 type wrr
 weight 2
!
queue 8
 meter-type packets
 pir 1000
 type wrr
 weight 2
!
queue 9
 meter-type packets
 pir 300
 type wrr
 weight 2
!
queue 10
 meter-type packets
 pir 3000
 type wrr
 weight 2
!
queue 11
 meter-type packets
 pir 3000
 type wrr
 weight 2
!
queue 12
 meter-type packets
 pir 2000
 type wrr
 weight 2
!
queue 13
 meter-type packets
 pir 5000
 type wrr
 weight 2
!
queue 14
 meter-type packets
 pir 10000
 type wrr
 weight 6
!
queue 15
 meter-type packets
 pir 5000
 type wrr
 weight 4
!
queue 16
 meter-type packets
 pir 5000
 type wrr
 weight 4
!
queue 17
 meter-type packets
 pir 500
 type wrr
 weight 2
!
queue 18
 meter-type packets
 pir 500
 type wrr
 weight 2
```

```
 !
 queue 19
  meter-type packets
  pir 5000
  type wrr
  weight 3
 !
 queue 20
  meter-type packets
  pir 1500
  type wrr
  weight 10
 !
 queue 21
  meter-type packets
  pir 16000
  type wrr
  weight 30
 !
 queue 22
  meter-type packets
  pir 500
  type wrr
  weight 10
 !
 queue 23
  meter-type packets
  pir 500
  type wrr
  weight 10
 !
 port
  meter-type packets
!
hardware
 !
 access-list
  counters per-entry
 !
 tcam
!
line vty
 service-policy type qos in oob-qos-policy
!
interface Loopback 0
 description Router-ID
 ip address 10.0.1.0/32
!
interface Management 0
 description Management0
 mtu 1500
 autoneg on
 speed 1000
!
interface Ethernet0
 mtu 9100
 speed 100000
 shutdown
!
interface Ethernet8
 mtu 9100
 speed 100000
 shutdown
!
interface Ethernet16
 mtu 9100
 speed 100000
 shutdown
!
interface Ethernet24
 mtu 9100
 speed 100000
```

```
 shutdown
!
interface Ethernet32
 mtu 9100
 speed 100000
 shutdown
!
interface Ethernet40
 mtu 9100
 speed 100000
 shutdown
!
interface Ethernet48
 mtu 9100
 speed 100000
 shutdown
!
interface Ethernet56
 mtu 9100
 speed 100000
 shutdown
!
interface Ethernet64
 mtu 9100
 speed 100000
 shutdown
!
interface Ethernet72
 mtu 9100
 speed 100000
 shutdown
!
interface Ethernet80
 mtu 9100
 speed 100000
 shutdown
!
interface Ethernet88
 mtu 9100
 speed 100000
 shutdown
!
interface Ethernet96
 mtu 9100
 speed 100000
 shutdown
!
interface Ethernet104
 mtu 9100
 speed 100000
 shutdown
!
interface Ethernet112
 mtu 9100
 speed 100000
 shutdown
!
interface Ethernet120
 mtu 9100
 speed 100000
 shutdown
!
interface Ethernet128
 mtu 9100
 speed 100000
 shutdown
!
interface Ethernet136
 mtu 9100
 speed 100000
 shutdown
!
```

```
interface Ethernet144
 mtu 9100
 speed 100000
 shutdown
!
interface Ethernet152
 mtu 9100
 speed 100000
 shutdown
!
interface Ethernet160
 mtu 9100
 speed 100000
 shutdown
!
interface Ethernet168
 description "Connected to Leaf1"
 mtu 9100
 speed 100000
 no shutdown
 ipv6 enable
!
interface Ethernet176
 mtu 9100
 speed 100000
 shutdown
!
interface Ethernet184
 mtu 9100
 speed 100000
 shutdown
!
interface Ethernet192
 description "Connected to BL1"
 mtu 9100
 speed 100000
 no shutdown
 ipv6 enable
!
interface Ethernet200
 mtu 9100
 speed 100000
 shutdown
!
interface Ethernet208
 mtu 9100
 speed 100000
 shutdown
!
interface Ethernet216
 mtu 9100
 speed 100000
 shutdown
!
interface Ethernet224
 mtu 9100
 speed 100000
 shutdown
!
interface Ethernet232
 mtu 9100
 speed 100000
 shutdown
!
interface Ethernet240
 mtu 9100
 speed 100000
 shutdown
!
interface Ethernet248
 mtu 9100
 speed 100000
```

```
 shutdown
!
interface Ethernet256
 mtu 9100
 speed 10000
 shutdown
!
interface Ethernet257
 mtu 9100
 speed 10000
 shutdown
!
router bgp 65000
 router-id 10.0.1.0
 log-neighbor-changes
 bestpath as-path multipath-relax
 timers 60 180
 !
 address-family ipv4 unicast
  redistribute connected
  maximum-paths 128
  maximum-paths ibgp 1
 !
 address-family l2vpn evpn
 !
 peer-group borderRouter
  remote-as external
  timers connect 30
  advertisement-interval 0
  bfd
  capability extended-nexthop
  !
  address-family ipv4 unicast
   activate
   send-community both
  !
  address-family l2vpn evpn
   activate
 !
 peer-group leaf
  remote-as external
  timers connect 30
  advertisement-interval 0
  bfd
  capability extended-nexthop
  !
  address-family ipv4 unicast
   activate
   send-community both
  !
  address-family l2vpn evpn
   activate
 !
 neighbor interface Ethernet168
  peer-group leaf
 !
 neighbor interface Ethernet192
  peer-group borderRouter
!
class-map class-oob-arp match-type fields match-all
 match ethertype arp
!
class-map class-oob-dhcp-client match-type fields match-all
 match ethertype ip
 match ip protocol udp
 match destination-port eq 68
!
class-map class-oob-dhcp-server match-type fields match-all
 match ethertype ip
 match ip protocol udp
 match destination-port eq 67
!
```

```
class-map class-oob-ip-multicast match-type fields match-all
 match ethertype ip
 match destination-address ip 224.0.0.0/4
!
class-map class-oob-ipv6-multicast match-type fields match-all
 match ethertype 0x86DD
 match destination-address ipv6 ff00::/8
!
class-map copp-system-arp match-type copp
 match protocol arp_req
 match protocol arp_resp
 match protocol neigh_discovery
!
class-map copp-system-bfd match-type copp
 match protocol bfd
 match protocol bfdv6
!
class-map copp-system-bgp match-type copp
 match protocol bgp
 match protocol bgpv6
!
class-map copp-system-dhcp match-type copp
 match protocol dhcp
 match protocol dhcpv6
!
class-map copp-system-dhcpl2 match-type copp
 match protocol dhcp_l2
 match protocol dhcpv6_l2
!
class-map copp-system-iccp match-type copp
 match protocol iccp
!
class-map copp-system-icmp match-type copp
 match protocol icmp
 match protocol icmpv6
!
class-map copp-system-igmp match-type copp
 match protocol igmp_query
!
class-map copp-system-ip2me match-type copp
 match protocol ip2me
!
class-map copp-system-lacp match-type copp
 match protocol lacp
!
class-map copp-system-lldp match-type copp
 match protocol lldp
!
class-map copp-system-mtu match-type copp
 match protocol l3_mtu_error
!
class-map copp-system-ospf match-type copp
 match protocol ospf
!
class-map copp-system-pim match-type copp
 match protocol pim
!
class-map copp-system-sflow match-type copp
 match protocol sample_packet
!
class-map copp-system-stp match-type copp
 match protocol stp
 match protocol pvrst
!
class-map copp-system-subnet match-type copp
 match protocol subnet
!
class-map copp-system-suppress match-type copp
 match protocol arp_suppress
 match protocol nd_suppress
!
class-map copp-system-ttl match-type copp
```

```
 match protocol ttl_error
!
class-map copp-system-udld match-type copp
 match protocol udld
!
class-map copp-system-vrrp match-type copp
 match protocol vrrp
 match protocol vrrpv6
!
class-map default match-type any
!
copp-action copp-system-arp
 set trap-action copy
 set trap-queue 10
 set trap-priority 10
 police cir 3000 cbs 3000
 police meter-type pps
 police mode sr_tcm red drop
!
copp-action copp-system-bfd
 set trap-action trap
 set trap-queue 20
 set trap-priority 20
 police cir 1500 cbs 1500
 police meter-type pps
 police mode sr_tcm red drop
!
copp-action copp-system-bgp
 set trap-action trap
 set trap-queue 14
 set trap-priority 14
 police cir 10000 cbs 10000
 police meter-type pps
 police mode sr_tcm red drop
!
copp-action copp-system-dhcp
 set trap-action trap
 set trap-queue 9
 set trap-priority 9
 police cir 300 cbs 300
 police meter-type pps
 police mode sr_tcm red drop
!
copp-action copp-system-iccp
 set trap-action trap
 set trap-queue 16
 set trap-priority 16
 police cir 5000 cbs 5000
 police meter-type pps
 police mode sr_tcm red drop
!
copp-action copp-system-icmp
 set trap-action trap
 set trap-queue 8
 set trap-priority 8
 police cir 1000 cbs 1000
 police meter-type pps
 police mode sr_tcm red drop
!
copp-action copp-system-igmp
 set trap-action trap
 set trap-queue 12
 set trap-priority 12
 police cir 2000 cbs 2000
 police meter-type pps
 police mode sr_tcm red drop
!
copp-action copp-system-ip2me
 set trap-action trap
 set trap-queue 7
 set trap-priority 7
 police cir 6000 cbs 6000
```

```
 police meter-type pps
 police mode sr_tcm red drop
!
copp-action copp-system-lacp
 set trap-action trap
 set trap-queue 23
 set trap-priority 23
 police cir 500 cbs 500
 police meter-type pps
 police mode sr_tcm red drop
!
copp-action copp-system-lldp
 set trap-action trap
 set trap-queue 18
 set trap-priority 18
 police cir 500 cbs 500
 police meter-type pps
 police mode sr_tcm red drop
!
copp-action copp-system-mtu
 set trap-action trap
 set trap-queue 4
 set trap-priority 4
 police cir 500 cbs 500
 police meter-type pps
 police mode sr_tcm red drop
!
copp-action copp-system-ospf
 set trap-action copy
 set trap-queue 15
 set trap-priority 15
 police cir 5000 cbs 5000
 police meter-type pps
 police mode sr_tcm red drop
!
copp-action copp-system-pim
 set trap-action trap
 set trap-queue 13
 set trap-priority 13
 police cir 5000 cbs 5000
 police meter-type pps
 police mode sr_tcm red drop
!
copp-action copp-system-sflow
 set trap-action trap
 set trap-queue 3
 set trap-priority 3
 police cir 8000 cbs 8000
 police meter-type pps
 police mode sr_tcm red drop
!
copp-action copp-system-stp
 set trap-action trap
 set trap-queue 21
 set trap-priority 21
 police cir 16000 cbs 16000
 police meter-type pps
 police mode sr_tcm red drop
!
copp-action copp-system-subnet
 set trap-action trap
 set trap-queue 6
 set trap-priority 6
 police cir 2000 cbs 2000
 police meter-type pps
 police mode sr_tcm red drop
!
copp-action copp-system-suppress
 set trap-action trap
 set trap-queue 11
 set trap-priority 11
 police cir 3000 cbs 3000
```

```
 police meter-type pps
 police mode sr_tcm red drop
!
copp-action copp-system-ttl
 set trap-action trap
 set trap-queue 0
 set trap-priority 0
 police cir 100 cbs 100
 police meter-type pps
 police mode sr_tcm red drop
!
copp-action copp-system-udld
 set trap-action trap
 set trap-queue 22
 set trap-priority 22
 police cir 500 cbs 500
 police meter-type pps
 police mode sr_tcm red drop
!
copp-action copp-system-vrrp
 set trap-action trap
 set trap-queue 17
 set trap-priority 17
 police cir 500 cbs 500
 police meter-type pps
 police mode sr_tcm red drop
!
copp-action default
 set trap-queue 0
 police cir 100 cbs 100
 police meter-type pps
 police mode sr_tcm red drop
!
policy-map copp-system-policy type copp
 class default priority 0
  set copp-action default
 !
 class copp-system-vrrp priority 0
  set copp-action copp-system-vrrp
 !
 class copp-system-udld priority 0
  set copp-action copp-system-udld
 !
 class copp-system-ttl priority 0
  set copp-action copp-system-ttl
 !
 class copp-system-suppress priority 0
  set copp-action copp-system-suppress
 !
 class copp-system-subnet priority 0
  set copp-action copp-system-subnet
 !
 class copp-system-stp priority 0
  set copp-action copp-system-stp
 !
 class copp-system-sflow priority 0
  set copp-action copp-system-sflow
 !
 class copp-system-pim priority 0
  set copp-action copp-system-pim
 !
 class copp-system-ospf priority 0
  set copp-action copp-system-ospf
 !
 class copp-system-mtu priority 0
  set copp-action copp-system-mtu
 !
 class copp-system-lldp priority 0
  set copp-action copp-system-lldp
 !
 class copp-system-lacp priority 0
  set copp-action copp-system-lacp
```

```
  !
  class copp-system-ip2me priority 0
   set copp-action copp-system-ip2me
  !
  class copp-system-igmp priority 0
   set copp-action copp-system-igmp
  !
  class copp-system-icmp priority 0
   set copp-action copp-system-icmp
  !
  class copp-system-iccp priority 0
   set copp-action copp-system-iccp
  !
  class copp-system-dhcpl2 priority 0
   set copp-action copp-system-dhcp
  !
  class copp-system-dhcp priority 0
   set copp-action copp-system-dhcp
  !
  class copp-system-bgp priority 0
   set copp-action copp-system-bgp
  !
  class copp-system-bfd priority 0
   set copp-action copp-system-bfd
  !
  class copp-system-arp priority 0
   set copp-action copp-system-arp
  !
 !
 policy-map oob-qos-policy type qos
  description "QoS Ratelimiting policy for OOB port"
  class class-oob-dhcp-client priority 1020
   police cir 512000
  !
  class class-oob-dhcp-server priority 1015
   police cir 512000
  !
  class class-oob-arp priority 1010
   police cir 256000
  !
  class class-oob-ipv6-multicast priority 1005
   police cir 256000
  !
  class class-oob-ip-multicast priority 1000
   police cir 256000
  !
```

Fabric A Leaf1

```
!
ip load-share hash ipv4 ipv4-src-ip
ip load-share hash ipv4 ipv4-dst-ip
ip load-share hash ipv4 ipv4-ip-proto
ip load-share hash ipv4 ipv4-l4-src-port
ip load-share hash ipv4 ipv4-l4-dst-port
ip load-share hash ipv6 ipv6-dst-ip
ip  load-share  hash  ipv6  ipv6-src-ip
ip load-share hash ipv6 ipv6-next-hdr
ip load-share hash ipv6 ipv6-l4-src-port
ip load-share hash ipv6 ipv6-l4-dst-port
ssh-server vrf mgmt
mac address-table aging-time 600
kdump enable
kdump memory 0M-2G:256M,2G-4G:256M,4G-8G:384M,8G-:448M
kdump num-dumps 3

ip anycast-mac-address 00:11:11:11:11:11
ip anycast-address enable
ipv6 anycast-address enable
```

```
core enable
lldp system-name Fabric-A-Leaf1
factory default profile l3 confirm
interface breakout port 1/5 mode 1x40G
interface breakout port 1/6 mode 1x40G
ip vrf mgmt
ip vrf VrfTenant1
!
ip vrf VrfTenant2
!
!
!
nat
 timeout 600
 tcp-timeout 86400
 udp-timeout 300
!
tam
!
qos scheduler-policy copp-scheduler-policy
 !
 queue 0
  type wrr
  weight 1
 !
 queue 1
  meter-type packets
  pir 100
  type wrr
  weight 1
 !
 queue 2
  meter-type packets
  pir 600
  type wrr
  weight 2
 !
 queue 3
  meter-type packets
  pir 8000
  type wrr
  weight 1
 !
 queue 4
  meter-type packets
  pir 500
  type wrr
  weight 1
 !
 queue 5
  meter-type packets
  pir 300
  type wrr
  weight 1
 !
 queue 6
  meter-type packets
  pir 2000
  type wrr
  weight 2
 !
 queue 7
  meter-type packets
  pir 6000
  type wrr
  weight 2
 !
 queue 8
  meter-type packets
  pir 1000
  type wrr
  weight 2
```

```
!
queue 9
 meter-type packets
 pir 300
 type wrr
 weight 2
!
queue 10
 meter-type packets
 pir 3000
 type wrr
 weight 2
!
queue 11
 meter-type packets
 pir 3000
 type wrr
 weight 2
!
queue 12
 meter-type packets
 pir 2000
 type wrr
 weight 2
!
queue 13
 meter-type packets
 pir 5000
 type wrr
 weight 2
!
queue 14
 meter-type packets
 pir 10000
 type wrr
 weight 6
!
queue 15
 meter-type packets
 pir 5000
 type wrr
 weight 4
!
queue 16
 meter-type packets
 pir 5000
 type wrr
 weight 4
!
queue 17
 meter-type packets
 pir 500
 type wrr
 weight 2
!
queue 18
 meter-type packets
 pir 500
 type wrr
 weight 2
!
queue 19
 meter-type packets
 pir 5000
 type wrr
 weight 3
!
queue 20
 meter-type packets
 pir 1500
 type wrr
 weight 10
```

```
 !
 queue 21
  meter-type packets
  pir 16000
  type wrr
  weight 30
 !
 queue 22
  meter-type packets
  pir 500
  type wrr
  weight 10
 !
 queue 23
  meter-type packets
  pir 500
  type wrr
  weight 10
 !
 port
  meter-type packets
!
hardware
 !
 access-list
  counters per-entry
 !
 tcam
!
line vty
 service-policy type qos in oob-qos-policy
!
interface Vlan101
 description "Tenant-1 Compute VM"
 neigh-suppress
 ip vrf forwarding VrfTenant1
 ip anycast-address 192.168.10.254/24
!
interface Vlan201
 description "Tenant-2 Compute VM"
 neigh-suppress
 ip vrf forwarding VrfTenant2
 ip anycast-address 192.168.20.254/24
!
interface Vlan3101
 description "Vlan for VNI to VRF mapping"
 neigh-suppress
 ip vrf forwarding VrfTenant1
!
interface Vlan3102
 description "Vlan for VNI to VRF mapping"
 neigh-suppress
 ip vrf forwarding VrfTenant2
!
interface Loopback 0
 description Router-ID
 ip address 10.0.1.1/32
!
interface Loopback 1
 description nve_loopback
 ip address 10.101.101.1/32
!
interface Management 0
 description Management0
 mtu 1500
 autoneg on
 speed 1000
!
interface Ethernet0
 mtu 9100
 speed 100000
 shutdown
```

```
!
interface Ethernet4
 mtu 9100
 speed 100000
 shutdown
!
interface Ethernet8
 mtu 9100
 speed 100000
 shutdown
!
interface Ethernet12
 mtu 9100
 speed 100000
 shutdown
!
interface Ethernet16
 description "Connected to Tenant-1 Compute"
 mtu 9100
 speed 40000
 no shutdown
 switchport access Vlan 101
!
interface Ethernet20
 description "Connected to Tenant-2 Compute"
 mtu 9100
 speed 40000
 no shutdown
 switchport access Vlan 201
!
interface Ethernet24
 mtu 9100
 speed 100000
 shutdown
!
interface Ethernet28
 mtu 9100
 speed 100000
 shutdown
!
interface Ethernet32
 mtu 9100
 speed 100000
 shutdown
!
interface Ethernet36
 mtu 9100
 speed 100000
 shutdown
!
interface Ethernet40
 mtu 9100
 speed 100000
 shutdown
!
interface Ethernet44
 mtu 9100
 speed 100000
 shutdown
!
interface Ethernet48
 mtu 9100
 speed 100000
 shutdown
!
interface Ethernet52
 mtu 9100
 speed 100000
 shutdown
!
interface Ethernet56
 mtu 9100
```

```
 speed 100000
 shutdown
!
interface Ethernet60
 mtu 9100
 speed 100000
 shutdown
!
interface Ethernet64
 mtu 9100
 speed 100000
 shutdown
!
interface Ethernet68
 mtu 9100
 speed 100000
 shutdown
!
interface Ethernet72
 mtu 9100
 speed 100000
 shutdown
!
interface Ethernet76
 mtu 9100
 speed 100000
 shutdown
!
interface Ethernet80
 mtu 9100
 speed 100000
 shutdown
!
interface Ethernet84
 mtu 9100
 speed 100000
 shutdown
!
interface Ethernet88
 mtu 9100
 speed 100000
 shutdown
!
interface Ethernet92
 description "Connected to Spine1"
 mtu 9100
 speed 100000
 no shutdown
 ipv6 enable
!
interface Ethernet96
 mtu 9100
 speed 100000
 shutdown
!
interface Ethernet100
 mtu 9100
 speed 100000
 shutdown
!
interface Ethernet104
 mtu 9100
 speed 100000
 shutdown
!
interface Ethernet108
 mtu 9100
 speed 100000
 shutdown
!
interface Ethernet112
 mtu 9100
```

```
 speed 100000
 shutdown
!
interface Ethernet116
 mtu 9100
 speed 100000
 shutdown
!
interface Ethernet120
 mtu 9100
 speed 100000
 shutdown
!
interface Ethernet124
 mtu 9100
 speed 100000
 shutdown
!
interface Ethernet128
 mtu 9100
 speed 10000
 shutdown
!
interface Ethernet129
 mtu 9100
 speed 10000
 shutdown
!
router bgp 65001 vrf VrfTenant1
 router-id 10.0.1.1
 log-neighbor-changes
 timers 60 180
 !
 address-family ipv4 unicast
  redistribute connected
  maximum-paths 128
  maximum-paths ibgp 1
 !
 address-family l2vpn evpn
  advertise ipv4 unicast
!
router bgp 65001 vrf VrfTenant2
 router-id 10.0.1.1
 log-neighbor-changes
 timers 60 180
 !
 address-family ipv4 unicast
  redistribute connected
  maximum-paths 128
  maximum-paths ibgp 1
 !
 address-family l2vpn evpn
  advertise ipv4 unicast
!
router bgp 65001
 router-id 10.0.1.1
 log-neighbor-changes
 bestpath as-path multipath-relax
 timers 60 180
 !
 address-family ipv4 unicast
  redistribute connected
  maximum-paths 128
  maximum-paths ibgp 1
 !
 address-family l2vpn evpn
  advertise-all-vni
 !
 peer-group spine
  remote-as external
  timers connect 30
  advertisement-interval 0
```

```
  bfd
  capability extended-nexthop
  !
  address-family ipv4 unicast
   activate
   allowas-in 2
   send-community both
  !
  address-family l2vpn evpn
   activate
 !
 neighbor interface Ethernet92
  peer-group spine
!
interface vxlan vtep1
 source-ip 10.101.101.1
 map vni 10101 vlan 101
 map vni 10201 vlan 201
 map vni 103101 vlan 3101
 map vni 103102 vlan 3102
 map vni 103101 vrf VrfTenant1
 map vni 103102 vrf VrfTenant2
!
class-map class-oob-arp match-type fields match-all
 match ethertype arp
!
class-map class-oob-dhcp-client match-type fields match-all
 match ethertype ip
 match ip protocol udp
 match destination-port eq 68
!
class-map class-oob-dhcp-server match-type fields match-all
 match ethertype ip
 match ip protocol udp
 match destination-port eq 67
!
class-map class-oob-ip-multicast match-type fields match-all
 match ethertype ip
 match destination-address ip 224.0.0.0/4
!
class-map class-oob-ipv6-multicast match-type fields match-all
 match ethertype 0x86DD
 match destination-address ipv6 ff00::/8
!
class-map copp-system-arp match-type copp
 match protocol arp_req
 match protocol arp_resp
 match protocol neigh_discovery
!
class-map copp-system-bfd match-type copp
 match protocol bfd
 match protocol bfdv6
!
class-map copp-system-bgp match-type copp
 match protocol bgp
 match protocol bgpv6
!
class-map copp-system-dhcp match-type copp
 match protocol dhcp
 match protocol dhcpv6
!
class-map copp-system-dhcpl2 match-type copp
 match protocol dhcp_l2
 match protocol dhcpv6_l2
!
class-map copp-system-iccp match-type copp
 match protocol iccp
!
class-map copp-system-icmp match-type copp
 match protocol icmp
 match protocol icmpv6
!
```

```
class-map copp-system-igmp match-type copp
 match protocol igmp_query
!
class-map copp-system-ip2me match-type copp
 match protocol ip2me
!
class-map copp-system-lacp match-type copp
 match protocol lacp
!
class-map copp-system-lldp match-type copp
 match protocol lldp
!
class-map copp-system-mtu match-type copp
 match protocol l3_mtu_error
!
class-map copp-system-nat match-type copp
 match protocol src_nat_miss
 match protocol dest_nat_miss
!
class-map copp-system-ospf match-type copp
 match protocol ospf
!
class-map copp-system-pim match-type copp
 match protocol pim
!
class-map copp-system-sflow match-type copp
 match protocol sample_packet
!
class-map copp-system-stp match-type copp
 match protocol stp
 match protocol pvrst
!
class-map copp-system-subnet match-type copp
 match protocol subnet
!
class-map copp-system-suppress match-type copp
 match protocol arp_suppress
 match protocol nd_suppress
!
class-map copp-system-ttl match-type copp
 match protocol ttl_error
!
class-map copp-system-udld match-type copp
 match protocol udld
!
class-map copp-system-vrrp match-type copp
 match protocol vrrp
 match protocol vrrpv6
!
class-map default match-type any
!
copp-action copp-system-arp
 set trap-action copy
 set trap-queue 10
 set trap-priority 10
 police cir 3000 cbs 3000
 police meter-type pps
 police mode sr_tcm red drop
!
copp-action copp-system-bfd
 set trap-action trap
 set trap-queue 20
 set trap-priority 20
 police cir 1500 cbs 1500
 police meter-type pps
 police mode sr_tcm red drop
!
copp-action copp-system-bgp
 set trap-action trap
 set trap-queue 14
 set trap-priority 14
 police cir 10000 cbs 10000
```

```
 police meter-type pps
 police mode sr_tcm red drop
!
copp-action copp-system-dhcp
 set trap-action trap
 set trap-queue 9
 set trap-priority 9
 police cir 300 cbs 300
 police meter-type pps
 police mode sr_tcm red drop
!
copp-action copp-system-iccp
 set trap-action trap
 set trap-queue 16
 set trap-priority 16
 police cir 5000 cbs 5000
 police meter-type pps
 police mode sr_tcm red drop
!
copp-action copp-system-icmp
 set trap-action trap
 set trap-queue 8
 set trap-priority 8
 police cir 1000 cbs 1000
 police meter-type pps
 police mode sr_tcm red drop
!
copp-action copp-system-igmp
 set trap-action trap
 set trap-queue 12
 set trap-priority 12
 police cir 2000 cbs 2000
 police meter-type pps
 police mode sr_tcm red drop
!
copp-action copp-system-ip2me
 set trap-action trap
 set trap-queue 7
 set trap-priority 7
 police cir 6000 cbs 6000
 police meter-type pps
 police mode sr_tcm red drop
!
copp-action copp-system-lacp
 set trap-action trap
 set trap-queue 23
 set trap-priority 23
 police cir 500 cbs 500
 police meter-type pps
 police mode sr_tcm red drop
!
copp-action copp-system-lldp
 set trap-action trap
 set trap-queue 18
 set trap-priority 18
 police cir 500 cbs 500
 police meter-type pps
 police mode sr_tcm red drop
!
copp-action copp-system-mtu
 set trap-action trap
 set trap-queue 4
 set trap-priority 4
 police cir 500 cbs 500
 police meter-type pps
 police mode sr_tcm red drop
!
copp-action copp-system-nat
 set trap-action trap
 set trap-queue 5
 set trap-priority 5
 police cir 300 cbs 300
```

```
 police meter-type pps
 police mode sr_tcm red drop
!
copp-action copp-system-ospf
 set trap-action copy
 set trap-queue 15
 set trap-priority 15
 police cir 5000 cbs 5000
 police meter-type pps
 police mode sr_tcm red drop
!
copp-action copp-system-pim
 set trap-action trap
 set trap-queue 13
 set trap-priority 13
 police cir 5000 cbs 5000
 police meter-type pps
 police mode sr_tcm red drop
!
copp-action copp-system-sflow
 set trap-action trap
 set trap-queue 3
 set trap-priority 3
 police cir 8000 cbs 8000
 police meter-type pps
 police mode sr_tcm red drop
!
copp-action copp-system-stp
 set trap-action trap
 set trap-queue 21
 set trap-priority 21
 police cir 16000 cbs 16000
 police meter-type pps
 police mode sr_tcm red drop
!
copp-action copp-system-subnet
 set trap-action trap
 set trap-queue 6
 set trap-priority 6
 police cir 2000 cbs 2000
 police meter-type pps
 police mode sr_tcm red drop
!
copp-action copp-system-suppress
 set trap-action trap
 set trap-queue 11
 set trap-priority 11
 police cir 3000 cbs 3000
 police meter-type pps
 police mode sr_tcm red drop
!
copp-action copp-system-ttl
 set trap-action trap
 set trap-queue 0
 set trap-priority 0
 police cir 100 cbs 100
 police meter-type pps
 police mode sr_tcm red drop
!
copp-action copp-system-udld
 set trap-action trap
 set trap-queue 22
 set trap-priority 22
 police cir 500 cbs 500
 police meter-type pps
 police mode sr_tcm red drop
!
copp-action copp-system-vrrp
 set trap-action trap
 set trap-queue 17
 set trap-priority 17
 police cir 500 cbs 500
```

```
 police meter-type pps
 police mode sr_tcm red drop
!
copp-action default
 set trap-queue 0
 police cir 100 cbs 100
 police meter-type pps
 police mode sr_tcm red drop
!
policy-map copp-system-policy type copp
 class default priority 0
  set copp-action default
 !
 class copp-system-vrrp priority 0
  set copp-action copp-system-vrrp
 !
 class copp-system-udld priority 0
  set copp-action copp-system-udld
 !
 class copp-system-ttl priority 0
  set copp-action copp-system-ttl
 !
 class copp-system-suppress priority 0
  set copp-action copp-system-suppress
 !
 class copp-system-subnet priority 0
  set copp-action copp-system-subnet
 !
 class copp-system-stp priority 0
  set copp-action copp-system-stp
 !
 class copp-system-sflow priority 0
  set copp-action copp-system-sflow
 !
 class copp-system-pim priority 0
  set copp-action copp-system-pim
 !
 class copp-system-ospf priority 0
  set copp-action copp-system-ospf
 !
 class copp-system-nat priority 0
  set copp-action copp-system-nat
 !
 class copp-system-mtu priority 0
  set copp-action copp-system-mtu
 !
 class copp-system-lldp priority 0
  set copp-action copp-system-lldp
 !
 class copp-system-lacp priority 0
  set copp-action copp-system-lacp
 !
 class copp-system-ip2me priority 0
  set copp-action copp-system-ip2me
 !
 class copp-system-igmp priority 0
  set copp-action copp-system-igmp
 !
 class copp-system-icmp priority 0
  set copp-action copp-system-icmp
 !
 class copp-system-iccp priority 0
  set copp-action copp-system-iccp
 !
 class copp-system-dhcpl2 priority 0
  set copp-action copp-system-dhcp
 !
 class copp-system-dhcp priority 0
  set copp-action copp-system-dhcp
 !
 class copp-system-bgp priority 0
  set copp-action copp-system-bgp
```

```
 !
 class copp-system-bfd priority 0
  set copp-action copp-system-bfd
 !
 class copp-system-arp priority 0
  set copp-action copp-system-arp
 !
!
policy-map oob-qos-policy type qos
 description "QoS Ratelimiting policy for OOB port"
 class class-oob-dhcp-client priority 1020
  police cir 512000
 !
 class class-oob-dhcp-server priority 1015
  police cir 512000
 !
 class class-oob-arp priority 1010
  police cir 256000
 !
 class class-oob-ipv6-multicast priority 1005
  police cir 256000
 !
 class class-oob-ip-multicast priority 1000
  police cir 256000
 !
```

Fabric A BL1

```
!
ip load-share hash ipv4 ipv4-src-ip
ip load-share hash ipv4 ipv4-dst-ip
ip load-share hash ipv4 ipv4-ip-proto
ip load-share hash ipv4 ipv4-l4-src-port
ip load-share hash ipv4 ipv4-l4-dst-port
ip load-share hash ipv6 ipv6-src-ip
ip  load-share  hash  ipv6  ipv6-dst-ip
ip load-share hash ipv6 ipv6-next-hdr
ip load-share hash ipv6 ipv6-l4-dst-port
ip load-share hash ipv6 ipv6-l4-src-port
ssh-server vrf mgmt
mac address-table aging-time 600
kdump enable
kdump memory 0M-2G:256M,2G-4G:256M,4G-8G:384M,8G-:448M
kdump num-dumps 3

ip anycast-mac-address 00:11:11:11:11:11
ip anycast-address enable
ipv6 anycast-address enable
core enable
lldp system-name Fabric-A-BL1
factory default profile l3 confirm
interface breakout port 1/5 mode 1x40G
interface breakout port 1/6 mode 1x40G
ip vrf mgmt
ip vrf VrfTenant1
!
ip vrf VrfTenant2
!
!
!
nat
 timeout 600
 tcp-timeout 86400
 udp-timeout 300
!
tam
!
qos scheduler-policy copp-scheduler-policy
 !
```

```
queue 0
 type wrr
 weight 1
!
queue 1
 meter-type packets
 pir 100
 type wrr
 weight 1
!
queue 2
 meter-type packets
 pir 600
 type wrr
 weight 2
!
queue 3
 meter-type packets
 pir 8000
 type wrr
 weight 1
!
queue 4
 meter-type packets
 pir 500
 type wrr
 weight 1
!
queue 5
 meter-type packets
 pir 300
 type wrr
 weight 1
!
queue 6
 meter-type packets
 pir 2000
 type wrr
 weight 2
!
queue 7
 meter-type packets
 pir 6000
 type wrr
 weight 2
!
queue 8
 meter-type packets
 pir 1000
 type wrr
 weight 2
!
queue 9
 meter-type packets
 pir 300
 type wrr
 weight 2
!
queue 10
 meter-type packets
 pir 3000
 type wrr
 weight 2
!
queue 11
 meter-type packets
 pir 3000
 type wrr
 weight 2
!
queue 12
 meter-type packets
```

```
 pir 2000
 type wrr
 weight 2
!
queue 13
 meter-type packets
 pir 5000
 type wrr
 weight 2
!
queue 14
 meter-type packets
 pir 10000
 type wrr
 weight 6
!
queue 15
 meter-type packets
 pir 5000
 type wrr
 weight 4
!
queue 16
 meter-type packets
 pir 5000
 type wrr
 weight 4
!
queue 17
 meter-type packets
 pir 500
 type wrr
 weight 2
!
queue 18
 meter-type packets
 pir 500
 type wrr
 weight 2
!
queue 19
 meter-type packets
 pir 5000
 type wrr
 weight 3
!
queue 20
 meter-type packets
 pir 1500
 type wrr
 weight 10
!
queue 21
 meter-type packets
 pir 16000
 type wrr
 weight 30
!
queue 22
 meter-type packets
 pir 500
 type wrr
 weight 10
!
queue 23
 meter-type packets
 pir 500
 type wrr
 weight 10
!
port
 meter-type packets
```

```
!
hardware
 !
 access-list
  counters per-entry
 !
 tcam
!
line vty
 service-policy type qos in oob-qos-policy
!
interface Vlan101
 description "Tenant-1 Compute VM"
 neigh-suppress
 ip vrf forwarding VrfTenant1
 ip anycast-address 192.168.10.254/24
!
interface Vlan201
 description "Tenant-2 Compute VM"
 neigh-suppress
 ip vrf forwarding VrfTenant2
 ip anycast-address 192.168.20.254/24
!
interface Vlan3101
 description "Vlan for VNI to VRF mapping"
 neigh-suppress
 ip vrf forwarding VrfTenant1
!
interface Vlan3102
 description "Vlan for VNI to VRF mapping"
 neigh-suppress
 ip vrf forwarding VrfTenant2
!
interface Loopback 0
 description Router-ID
 ip address 10.0.1.12/32
!
interface Loopback 1
 description nve_loopback
 ip address 10.101.101.12/32
!
interface Loopback 2
 description "Multi-Site External VTEP IP"
 ip address 10.111.111.12/32
!
interface Management 0
 description Management0
 mtu 1500
 autoneg on
 speed 1000
!
interface Ethernet0
 mtu 9100
 speed 100000
 shutdown
!
interface Ethernet4
 mtu 9100
 speed 100000
 shutdown
!
interface Ethernet8
 mtu 9100
 speed 100000
 shutdown
!
interface Ethernet12
 mtu 9100
 speed 100000
 shutdown
!
interface Ethernet16
```

```
 description "Connected to Tenant-1 Compute"
 mtu 9100
 speed 40000
 no shutdown
 switchport access Vlan 101
!
interface Ethernet20
 description "Connected to Tenant-2 Compute"
 mtu 9100
 speed 40000
 no shutdown
 switchport access Vlan 201
!
interface Ethernet24
 mtu 9100
 speed 100000
 shutdown
!
interface Ethernet28
 mtu 9100
 speed 100000
 shutdown
!
interface Ethernet32
 mtu 9100
 speed 100000
 shutdown
!
interface Ethernet36
 mtu 9100
 speed 100000
 shutdown
!
interface Ethernet40
 mtu 9100
 speed 100000
 shutdown
!
interface Ethernet44
 description "Connected to FabricB BL1"
 mtu 9100
 speed 100000
 no shutdown
 ipv6 enable
!
interface Ethernet48
 mtu 9100
 speed 100000
 shutdown
!
interface Ethernet52
 mtu 9100
 speed 100000
 shutdown
!
interface Ethernet56
 mtu 9100
 speed 100000
 shutdown
!
interface Ethernet60
 mtu 9100
 speed 100000
 shutdown
!
interface Ethernet64
 mtu 9100
 speed 100000
 shutdown
!
interface Ethernet68
 mtu 9100
```

```
 speed 100000
 shutdown
!
interface Ethernet72
 mtu 9100
 speed 100000
 shutdown
!
interface Ethernet76
 mtu 9100
 speed 100000
 shutdown
!
interface Ethernet80
 mtu 9100
 speed 100000
 shutdown
!
interface Ethernet84
 mtu 9100
 speed 100000
 shutdown
!
interface Ethernet88
 mtu 9100
 speed 100000
 shutdown
!
interface Ethernet92
 description "Connected to Spine1"
 mtu 9100
 speed 100000
 no shutdown
 ipv6 enable
!
interface Ethernet96
 mtu 9100
 speed 100000
 shutdown
!
interface Ethernet100
 mtu 9100
 speed 100000
 shutdown
!
interface Ethernet104
 mtu 9100
 speed 100000
 shutdown
!
interface Ethernet108
 mtu 9100
 speed 100000
 shutdown
!
interface Ethernet112
 mtu 9100
 speed 100000
 shutdown
!
interface Ethernet116
 mtu 9100
 speed 100000
 shutdown
!
interface Ethernet120
 mtu 9100
 speed 100000
 shutdown
!
interface Ethernet124
 mtu 9100
```

```
 speed 100000
 shutdown
!
interface Ethernet128
 mtu 9100
 speed 10000
 shutdown
!
interface Ethernet129
 mtu 9100
 speed 10000
 shutdown
!
router bgp 65012 vrf VrfTenant1
 router-id 10.0.1.12
 log-neighbor-changes
 timers 60 180
 !
 address-family ipv4 unicast
  redistribute connected
  maximum-paths 128
  maximum-paths ibgp 1
 !
 address-family l2vpn evpn
  advertise ipv4 unicast
  default-originate ipv4
  rd 65012:1
  route-target both auto
  route-target import 203101:1
  route-target export 103101:1
!
router bgp 65012 vrf VrfTenant2
 router-id 10.0.1.12
 log-neighbor-changes
 timers 60 180
 !
 address-family ipv4 unicast
  redistribute connected
  maximum-paths 128
  maximum-paths ibgp 1
 !
 address-family l2vpn evpn
  advertise ipv4 unicast
  default-originate ipv4
  rd 65012:2
  route-target both auto
  route-target import 203102:1
  route-target export 103102:1
!
router bgp 65012
 router-id 10.0.1.12
 log-neighbor-changes
 bestpath as-path multipath-relax
 timers 60 180
 !
 address-family ipv4 unicast
  redistribute connected
  maximum-paths 128
  maximum-paths ibgp 1
 !
 address-family l2vpn evpn
  advertise-all-vni
  !
  vni 10101
   route-target both auto
   route-target import 20101:101
   route-target export 10101:101
  !
  vni 10201
   route-target both auto
   route-target import 20201:201
   route-target export 10201:201
```

```
 !
 peer-group external
  remote-as external
  timers connect 30
  advertisement-interval 0
  capability extended-nexthop
  !
  address-family ipv4 unicast
   activate
   send-community both
  !
  address-family l2vpn evpn
   activate
   fabric-external
 !
 peer-group spine
  remote-as external
  timers connect 30
  advertisement-interval 0
  bfd
  capability extended-nexthop
  !
  address-family ipv4 unicast
   activate
   allowas-in 2
   send-community both
  !
  address-family l2vpn evpn
   activate
 !
 neighbor interface Ethernet44
  description "DCI Multi-Site Neighbor"
  peer-group external
 !
 neighbor interface Ethernet92
  peer-group spine
!
interface vxlan vtep12
 source-ip 10.101.101.12
 external-ip 10.111.111.12
 vni-downstream external
 map vni 10101 vlan 101
 map vni 10201 vlan 201
 map vni 103101 vlan 3101
 map vni 103102 vlan 3102
 map vni 103101 vrf VrfTenant1
 map vni 103102 vrf VrfTenant2
!
class-map class-oob-arp match-type fields match-all
 match ethertype arp
!
class-map class-oob-dhcp-client match-type fields match-all
 match ethertype ip
 match ip protocol udp
 match destination-port eq 68
!
class-map class-oob-dhcp-server match-type fields match-all
 match ethertype ip
 match ip protocol udp
 match destination-port eq 67
!
class-map class-oob-ip-multicast match-type fields match-all
 match ethertype ip
 match destination-address ip 224.0.0.0/4
!
class-map class-oob-ipv6-multicast match-type fields match-all
 match ethertype 0x86DD
 match destination-address ipv6 ff00::/8
!
class-map copp-system-arp match-type copp
 match protocol arp_req
 match protocol arp_resp
```

```
 match protocol neigh_discovery
!
class-map copp-system-bfd match-type copp
 match protocol bfd
 match protocol bfdv6
!
class-map copp-system-bgp match-type copp
 match protocol bgp
 match protocol bgpv6
!
class-map copp-system-dhcp match-type copp
 match protocol dhcp
 match protocol dhcpv6
!
class-map copp-system-dhcpl2 match-type copp
 match protocol dhcp_l2
 match protocol dhcpv6_l2
!
class-map copp-system-iccp match-type copp
 match protocol iccp
!
class-map copp-system-icmp match-type copp
 match protocol icmp
 match protocol icmpv6
!
class-map copp-system-igmp match-type copp
 match protocol igmp_query
!
class-map copp-system-ip2me match-type copp
 match protocol ip2me
!
class-map copp-system-lacp match-type copp
 match protocol lacp
!
class-map copp-system-lldp match-type copp
 match protocol lldp
!
class-map copp-system-mtu match-type copp
 match protocol l3_mtu_error
!
class-map copp-system-nat match-type copp
 match protocol src_nat_miss
 match protocol dest_nat_miss
!
class-map copp-system-ospf match-type copp
 match protocol ospf
!
class-map copp-system-pim match-type copp
 match protocol pim
!
class-map copp-system-sflow match-type copp
 match protocol sample_packet
!
class-map copp-system-stp match-type copp
 match protocol stp
 match protocol pvrst
!
class-map copp-system-subnet match-type copp
 match protocol subnet
!
class-map copp-system-suppress match-type copp
 match protocol arp_suppress
 match protocol nd_suppress
!
class-map copp-system-ttl match-type copp
 match protocol ttl_error
!
class-map copp-system-udld match-type copp
 match protocol udld
!
class-map copp-system-vrrp match-type copp
 match protocol vrrp
```

```
 match protocol vrrpv6
!
class-map default match-type any
!
copp-action copp-system-arp
 set trap-action copy
 set trap-queue 10
 set trap-priority 10
 police cir 3000 cbs 3000
 police meter-type pps
 police mode sr_tcm red drop
!
copp-action copp-system-bfd
 set trap-action trap
 set trap-queue 20
 set trap-priority 20
 police cir 1500 cbs 1500
 police meter-type pps
 police mode sr_tcm red drop
!
copp-action copp-system-bgp
 set trap-action trap
 set trap-queue 14
 set trap-priority 14
 police cir 10000 cbs 10000
 police meter-type pps
 police mode sr_tcm red drop
!
copp-action copp-system-dhcp
 set trap-action trap
 set trap-queue 9
 set trap-priority 9
 police cir 300 cbs 300
 police meter-type pps
 police mode sr_tcm red drop
!
copp-action copp-system-iccp
 set trap-action trap
 set trap-queue 16
 set trap-priority 16
 police cir 5000 cbs 5000
 police meter-type pps
 police mode sr_tcm red drop
!
copp-action copp-system-icmp
 set trap-action trap
 set trap-queue 8
 set trap-priority 8
 police cir 1000 cbs 1000
 police meter-type pps
 police mode sr_tcm red drop
!
copp-action copp-system-igmp
 set trap-action trap
 set trap-queue 12
 set trap-priority 12
 police cir 2000 cbs 2000
 police meter-type pps
 police mode sr_tcm red drop
!
copp-action copp-system-ip2me
 set trap-action trap
 set trap-queue 7
 set trap-priority 7
 police cir 6000 cbs 6000
 police meter-type pps
 police mode sr_tcm red drop
!
copp-action copp-system-lacp
 set trap-action trap
 set trap-queue 23
 set trap-priority 23
```

```
 police cir 500 cbs 500
 police meter-type pps
 police mode sr_tcm red drop
!
copp-action copp-system-lldp
 set trap-action trap
 set trap-queue 18
 set trap-priority 18
 police cir 500 cbs 500
 police meter-type pps
 police mode sr_tcm red drop
!
copp-action copp-system-mtu
 set trap-action trap
 set trap-queue 4
 set trap-priority 4
 police cir 500 cbs 500
 police meter-type pps
 police mode sr_tcm red drop
!
copp-action copp-system-nat
 set trap-action trap
 set trap-queue 5
 set trap-priority 5
 police cir 300 cbs 300
 police meter-type pps
 police mode sr_tcm red drop
!
copp-action copp-system-ospf
 set trap-action copy
 set trap-queue 15
 set trap-priority 15
 police cir 5000 cbs 5000
 police meter-type pps
 police mode sr_tcm red drop
!
copp-action copp-system-pim
 set trap-action trap
 set trap-queue 13
 set trap-priority 13
 police cir 5000 cbs 5000
 police meter-type pps
 police mode sr_tcm red drop
!
copp-action copp-system-sflow
 set trap-action trap
 set trap-queue 3
 set trap-priority 3
 police cir 8000 cbs 8000
 police meter-type pps
 police mode sr_tcm red drop
!
copp-action copp-system-stp
 set trap-action trap
 set trap-queue 21
 set trap-priority 21
 police cir 16000 cbs 16000
 police meter-type pps
 police mode sr_tcm red drop
!
copp-action copp-system-subnet
 set trap-action trap
 set trap-queue 6
 set trap-priority 6
 police cir 2000 cbs 2000
 police meter-type pps
 police mode sr_tcm red drop
!
copp-action copp-system-suppress
 set trap-action trap
 set trap-queue 11
 set trap-priority 11
```

```
 police cir 3000 cbs 3000
 police meter-type pps
 police mode sr_tcm red drop
!
copp-action copp-system-ttl
 set trap-action trap
 set trap-queue 0
 set trap-priority 0
 police cir 100 cbs 100
 police meter-type pps
 police mode sr_tcm red drop
!
copp-action copp-system-udld
 set trap-action trap
 set trap-queue 22
 set trap-priority 22
 police cir 500 cbs 500
 police meter-type pps
 police mode sr_tcm red drop
!
copp-action copp-system-vrrp
 set trap-action trap
 set trap-queue 17
 set trap-priority 17
 police cir 500 cbs 500
 police meter-type pps
 police mode sr_tcm red drop
!
copp-action default
 set trap-queue 0
 police cir 100 cbs 100
 police meter-type pps
 police mode sr_tcm red drop
!
policy-map copp-system-policy type copp
 class default priority 0
  set copp-action default
 !
 class copp-system-vrrp priority 0
  set copp-action copp-system-vrrp
 !
 class copp-system-udld priority 0
  set copp-action copp-system-udld
 !
 class copp-system-ttl priority 0
  set copp-action copp-system-ttl
 !
 class copp-system-suppress priority 0
  set copp-action copp-system-suppress
 !
 class copp-system-subnet priority 0
  set copp-action copp-system-subnet
 !
 class copp-system-stp priority 0
  set copp-action copp-system-stp
 !
 class copp-system-sflow priority 0
  set copp-action copp-system-sflow
 !
 class copp-system-pim priority 0
  set copp-action copp-system-pim
 !
 class copp-system-ospf priority 0
  set copp-action copp-system-ospf
 !
 class copp-system-nat priority 0
  set copp-action copp-system-nat
 !
 class copp-system-mtu priority 0
  set copp-action copp-system-mtu
 !
 class copp-system-lldp priority 0
```

```
  set copp-action copp-system-lldp
 !
 class copp-system-lacp priority 0
  set copp-action copp-system-lacp
 !
 class copp-system-ip2me priority 0
  set copp-action copp-system-ip2me
 !
 class copp-system-igmp priority 0
  set copp-action copp-system-igmp
 !
 class copp-system-icmp priority 0
  set copp-action copp-system-icmp
 !
 class copp-system-iccp priority 0
  set copp-action copp-system-iccp
 !
 class copp-system-dhcpl2 priority 0
  set copp-action copp-system-dhcp
 !
 class copp-system-dhcp priority 0
  set copp-action copp-system-dhcp
 !
 class copp-system-bgp priority 0
  set copp-action copp-system-bgp
 !
 class copp-system-bfd priority 0
  set copp-action copp-system-bfd
 !
 class copp-system-arp priority 0
  set copp-action copp-system-arp
 !
!
policy-map oob-qos-policy type qos
 description "QoS Ratelimiting policy for OOB port"
 class class-oob-dhcp-client priority 1020
  police cir 512000
 !
 class class-oob-dhcp-server priority 1015
  police cir 512000
 !
 class class-oob-arp priority 1010
  police cir 256000
 !
 class class-oob-ipv6-multicast priority 1005
  police cir 256000
 !
 class class-oob-ip-multicast priority 1000
  police cir 256000
 !
```

Fabric B Spine1

```
!
ip load-share hash ipv4 ipv4-dst-ip
ip load-share hash ipv4 ipv4-src-ip
ip load-share hash ipv4 ipv4-ip-proto
ip load-share hash ipv4 ipv4-l4-src-port
ip load-share hash ipv4 ipv4-l4-dst-port
ip load-share hash ipv6 ipv6-src-ip
ip  load-share  hash  ipv6  ipv6-dst-ip
ip load-share hash ipv6 ipv6-next-hdr
ip load-share hash ipv6 ipv6-l4-src-port
ip load-share hash ipv6 ipv6-l4-dst-port
ssh-server vrf mgmt
mac address-table aging-time 600
kdump enable
kdump memory 0M-2G:256M,2G-4G:256M,4G-8G:384M,8G-:448M
```

```
kdump num-dumps 3

core enable
lldp system-name Fabric-B-Spine1
factory default profile l3 confirm
ip vrf mgmt
!
!
nat
 timeout 600
 tcp-timeout 86400
 udp-timeout 300
!
tam
!
qos scheduler-policy copp-scheduler-policy
 !
 queue 0
  type wrr
  weight 1
 !
 queue 1
  meter-type packets
  pir 100
  type wrr
  weight 1
 !
 queue 2
  meter-type packets
  pir 600
  type wrr
  weight 2
 !
 queue 3
  meter-type packets
  pir 8000
  type wrr
  weight 1
 !
 queue 4
  meter-type packets
  pir 500
  type wrr
  weight 1
 !
 queue 5
  meter-type packets
  pir 300
  type wrr
  weight 1
 !
 queue 6
  meter-type packets
  pir 2000
  type wrr
  weight 2
 !
 queue 7
  meter-type packets
  pir 6000
  type wrr
  weight 2
 !
 queue 8
  meter-type packets
  pir 1000
  type wrr
  weight 2
 !
 queue 9
  meter-type packets
  pir 300
```

```
 type wrr
 weight 2
!
queue 10
 meter-type packets
 pir 3000
 type wrr
 weight 2
!
queue 11
 meter-type packets
 pir 3000
 type wrr
 weight 2
!
queue 12
 meter-type packets
 pir 2000
 type wrr
 weight 2
!
queue 13
 meter-type packets
 pir 5000
 type wrr
 weight 2
!
queue 14
 meter-type packets
 pir 10000
 type wrr
 weight 6
!
queue 15
 meter-type packets
 pir 5000
 type wrr
 weight 4
!
queue 16
 meter-type packets
 pir 5000
 type wrr
 weight 4
!
queue 17
 meter-type packets
 pir 500
 type wrr
 weight 2
!
queue 18
 meter-type packets
 pir 500
 type wrr
 weight 2
!
queue 19
 meter-type packets
 pir 5000
 type wrr
 weight 3
!
queue 20
 meter-type packets
 pir 1500
 type wrr
 weight 10
!
queue 21
 meter-type packets
 pir 16000
```

```
   type wrr
   weight 30
  !
  queue 22
   meter-type packets
   pir 500
   type wrr
   weight 10
  !
  queue 23
   meter-type packets
   pir 500
   type wrr
   weight 10
  !
  port
   meter-type packets
!
hardware
  !
  access-list
   counters per-entry
  !
  tcam
!
line vty
  service-policy type qos in oob-qos-policy
!
interface Loopback 0
  description Router-ID
  ip address 10.0.2.0/32
!
interface Management 0
  description Management0
  mtu 1500
  autoneg on
  speed 1000
!
interface Ethernet0
  mtu 9100
  speed 100000
  shutdown
!
interface Ethernet4
  mtu 9100
  speed 100000
  shutdown
!
interface Ethernet8
  mtu 9100
  speed 100000
  shutdown
!
interface Ethernet12
  mtu 9100
  speed 100000
  shutdown
!
interface Ethernet16
  mtu 9100
  speed 100000
  shutdown
!
interface Ethernet20
  mtu 9100
  speed 100000
  shutdown
!
interface Ethernet24
  mtu 9100
  speed 100000
  shutdown
```

```
!
interface Ethernet28
 mtu 9100
 speed 100000
 shutdown
!
interface Ethernet32
 mtu 9100
 speed 100000
 shutdown
!
interface Ethernet36
 mtu 9100
 speed 100000
 shutdown
!
interface Ethernet40
 description "Connected to Leaf1"
 mtu 9100
 speed 100000
 no shutdown
 ipv6 enable
!
interface Ethernet44
 mtu 9100
 speed 100000
 shutdown
!
interface Ethernet48
 mtu 9100
 speed 100000
 shutdown
!
interface Ethernet52
 mtu 9100
 speed 100000
 shutdown
!
interface Ethernet56
 mtu 9100
 speed 100000
 shutdown
!
interface Ethernet60
 mtu 9100
 speed 100000
 shutdown
!
interface Ethernet64
 mtu 9100
 speed 100000
 shutdown
!
interface Ethernet68
 mtu 9100
 speed 100000
 shutdown
!
interface Ethernet72
 mtu 9100
 speed 100000
 shutdown
!
interface Ethernet76
 mtu 9100
 speed 100000
 shutdown
!
interface Ethernet80
 mtu 9100
 speed 100000
 shutdown
```

```
!
interface Ethernet84
 mtu 9100
 speed 100000
 shutdown
!
interface Ethernet88
 description "Connected to BL1"
 mtu 9100
 speed 100000
 no shutdown
 ipv6 enable
!
interface Ethernet92
 mtu 9100
 speed 100000
 shutdown
!
interface Ethernet96
 mtu 9100
 speed 100000
 shutdown
!
interface Ethernet100
 mtu 9100
 speed 100000
 shutdown
!
interface Ethernet104
 mtu 9100
 speed 100000
 shutdown
!
interface Ethernet108
 mtu 9100
 speed 100000
 shutdown
!
interface Ethernet112
 mtu 9100
 speed 100000
 shutdown
!
interface Ethernet116
 mtu 9100
 speed 100000
 shutdown
!
interface Ethernet120
 mtu 9100
 speed 100000
 shutdown
!
interface Ethernet124
 mtu 9100
 speed 100000
 shutdown
!
interface Ethernet128
 mtu 9100
 speed 100000
 shutdown
!
interface Ethernet132
 mtu 9100
 speed 100000
 shutdown
!
interface Ethernet136
 mtu 9100
 speed 100000
 shutdown
```

```
!
interface Ethernet140
 mtu 9100
 speed 100000
 shutdown
!
interface Ethernet144
 mtu 9100
 speed 100000
 shutdown
!
interface Ethernet148
 mtu 9100
 speed 100000
 shutdown
!
interface Ethernet152
 mtu 9100
 speed 100000
 shutdown
!
interface Ethernet156
 mtu 9100
 speed 100000
 shutdown
!
interface Ethernet160
 mtu 9100
 speed 100000
 shutdown
!
interface Ethernet164
 mtu 9100
 speed 100000
 shutdown
!
interface Ethernet168
 mtu 9100
 speed 100000
 shutdown
!
interface Ethernet172
 mtu 9100
 speed 100000
 shutdown
!
interface Ethernet176
 mtu 9100
 speed 100000
 shutdown
!
interface Ethernet180
 mtu 9100
 speed 100000
 shutdown
!
interface Ethernet184
 mtu 9100
 speed 100000
 shutdown
!
interface Ethernet188
 mtu 9100
 speed 100000
 shutdown
!
interface Ethernet192
 mtu 9100
 speed 100000
 shutdown
!
interface Ethernet196
```

```
 mtu 9100
 speed 100000
 shutdown
!
interface Ethernet200
 mtu 9100
 speed 100000
 shutdown
!
interface Ethernet204
 mtu 9100
 speed 100000
 shutdown
!
interface Ethernet208
 mtu 9100
 speed 100000
 shutdown
!
interface Ethernet212
 mtu 9100
 speed 100000
 shutdown
!
interface Ethernet216
 mtu 9100
 speed 100000
 shutdown
!
interface Ethernet220
 mtu 9100
 speed 100000
 shutdown
!
interface Ethernet224
 mtu 9100
 speed 100000
 shutdown
!
interface Ethernet228
 mtu 9100
 speed 100000
 shutdown
!
interface Ethernet232
 mtu 9100
 speed 100000
 shutdown
!
interface Ethernet236
 mtu 9100
 speed 100000
 shutdown
!
interface Ethernet240
 mtu 9100
 speed 100000
 shutdown
!
interface Ethernet244
 mtu 9100
 speed 100000
 shutdown
!
interface Ethernet248
 mtu 9100
 speed 100000
 shutdown
!
interface Ethernet252
 mtu 9100
 speed 100000
```

```
 shutdown
!
interface Ethernet256
 mtu 9100
 speed 10000
 shutdown
!
interface Ethernet257
 mtu 9100
 speed 10000
 shutdown
!
router bgp 64600
 router-id 10.0.2.0
 log-neighbor-changes
 bestpath as-path multipath-relax
 timers 60 180
 !
 address-family ipv4 unicast
  redistribute connected
  maximum-paths 128
  maximum-paths ibgp 1
 !
 address-family l2vpn evpn
 !
 peer-group borderRouter
  remote-as external
  timers connect 30
  advertisement-interval 0
  bfd
  capability extended-nexthop
  !
  address-family ipv4 unicast
   activate
   send-community both
  !
  address-family l2vpn evpn
   activate
 !
 peer-group leaf
  remote-as external
  timers connect 30
  advertisement-interval 0
  bfd
  capability extended-nexthop
  !
  address-family ipv4 unicast
   activate
   send-community both
  !
  address-family l2vpn evpn
   activate
 !
 neighbor interface Ethernet40
  peer-group leaf
 !
 neighbor interface Ethernet88
  peer-group borderRouter
!
class-map class-oob-arp match-type fields match-all
 match ethertype arp
!
class-map class-oob-dhcp-client match-type fields match-all
 match ethertype ip
 match ip protocol udp
 match destination-port eq 68
!
class-map class-oob-dhcp-server match-type fields match-all
 match ethertype ip
 match ip protocol udp
 match destination-port eq 67
!
```

```
class-map class-oob-ip-multicast match-type fields match-all
 match ethertype ip
 match destination-address ip 224.0.0.0/4
!
class-map class-oob-ipv6-multicast match-type fields match-all
 match ethertype 0x86DD
 match destination-address ipv6 ff00::/8
!
class-map copp-system-arp match-type copp
 match protocol arp_req
 match protocol arp_resp
 match protocol neigh_discovery
!
class-map copp-system-bfd match-type copp
 match protocol bfd
 match protocol bfdv6
!
class-map copp-system-bgp match-type copp
 match protocol bgp
 match protocol bgpv6
!
class-map copp-system-dhcp match-type copp
 match protocol dhcp
 match protocol dhcpv6
!
class-map copp-system-dhcpl2 match-type copp
 match protocol dhcp_l2
 match protocol dhcpv6_l2
!
class-map copp-system-iccp match-type copp
 match protocol iccp
!
class-map copp-system-icmp match-type copp
 match protocol icmp
 match protocol icmpv6
!
class-map copp-system-igmp match-type copp
 match protocol igmp_query
!
class-map copp-system-ip2me match-type copp
 match protocol ip2me
!
class-map copp-system-lacp match-type copp
 match protocol lacp
!
class-map copp-system-lldp match-type copp
 match protocol lldp
!
class-map copp-system-mtu match-type copp
 match protocol l3_mtu_error
!
class-map copp-system-nat match-type copp
 match protocol src_nat_miss
 match protocol dest_nat_miss
!
class-map copp-system-ospf match-type copp
 match protocol ospf
!
class-map copp-system-pim match-type copp
 match protocol pim
!
class-map copp-system-sflow match-type copp
 match protocol sample_packet
!
class-map copp-system-stp match-type copp
 match protocol stp
 match protocol pvrst
!
class-map copp-system-subnet match-type copp
 match protocol subnet
!
class-map copp-system-suppress match-type copp
```

```
 match protocol arp_suppress
 match protocol nd_suppress
!
class-map copp-system-ttl match-type copp
 match protocol ttl_error
!
class-map copp-system-udld match-type copp
 match protocol udld
!
class-map copp-system-vrrp match-type copp
 match protocol vrrp
 match protocol vrrpv6
!
class-map default match-type any
!
copp-action copp-system-arp
 set trap-action copy
 set trap-queue 10
 set trap-priority 10
 police cir 3000 cbs 3000
 police meter-type pps
 police mode sr_tcm red drop
!
copp-action copp-system-bfd
 set trap-action trap
 set trap-queue 20
 set trap-priority 20
 police cir 1500 cbs 1500
 police meter-type pps
 police mode sr_tcm red drop
!
copp-action copp-system-bgp
 set trap-action trap
 set trap-queue 14
 set trap-priority 14
 police cir 10000 cbs 10000
 police meter-type pps
 police mode sr_tcm red drop
!
copp-action copp-system-dhcp
 set trap-action trap
 set trap-queue 9
 set trap-priority 9
 police cir 300 cbs 300
 police meter-type pps
 police mode sr_tcm red drop
!
copp-action copp-system-iccp
 set trap-action trap
 set trap-queue 16
 set trap-priority 16
 police cir 5000 cbs 5000
 police meter-type pps
 police mode sr_tcm red drop
!
copp-action copp-system-icmp
 set trap-action trap
 set trap-queue 8
 set trap-priority 8
 police cir 1000 cbs 1000
 police meter-type pps
 police mode sr_tcm red drop
!
copp-action copp-system-igmp
 set trap-action trap
 set trap-queue 12
 set trap-priority 12
 police cir 2000 cbs 2000
 police meter-type pps
 police mode sr_tcm red drop
!
copp-action copp-system-ip2me
```

```
 set trap-action trap
 set trap-queue 7
 set trap-priority 7
 police cir 6000 cbs 6000
 police meter-type pps
 police mode sr_tcm red drop
!
copp-action copp-system-lacp
 set trap-action trap
 set trap-queue 23
 set trap-priority 23
 police cir 500 cbs 500
 police meter-type pps
 police mode sr_tcm red drop
!
copp-action copp-system-lldp
 set trap-action trap
 set trap-queue 18
 set trap-priority 18
 police cir 500 cbs 500
 police meter-type pps
 police mode sr_tcm red drop
!
copp-action copp-system-mtu
 set trap-action trap
 set trap-queue 4
 set trap-priority 4
 police cir 500 cbs 500
 police meter-type pps
 police mode sr_tcm red drop
!
copp-action copp-system-nat
 set trap-action trap
 set trap-queue 5
 set trap-priority 5
 police cir 300 cbs 300
 police meter-type pps
 police mode sr_tcm red drop
!
copp-action copp-system-ospf
 set trap-action copy
 set trap-queue 15
 set trap-priority 15
 police cir 5000 cbs 5000
 police meter-type pps
 police mode sr_tcm red drop
!
copp-action copp-system-pim
 set trap-action trap
 set trap-queue 13
 set trap-priority 13
 police cir 5000 cbs 5000
 police meter-type pps
 police mode sr_tcm red drop
!
copp-action copp-system-sflow
 set trap-action trap
 set trap-queue 3
 set trap-priority 3
 police cir 8000 cbs 8000
 police meter-type pps
 police mode sr_tcm red drop
!
copp-action copp-system-stp
 set trap-action trap
 set trap-queue 21
 set trap-priority 21
 police cir 16000 cbs 16000
 police meter-type pps
 police mode sr_tcm red drop
!
copp-action copp-system-subnet
```

```
 set trap-action trap
 set trap-queue 6
 set trap-priority 6
 police cir 2000 cbs 2000
 police meter-type pps
 police mode sr_tcm red drop
!
copp-action copp-system-suppress
 set trap-action trap
 set trap-queue 11
 set trap-priority 11
 police cir 3000 cbs 3000
 police meter-type pps
 police mode sr_tcm red drop
!
copp-action copp-system-ttl
 set trap-action trap
 set trap-queue 0
 set trap-priority 0
 police cir 100 cbs 100
 police meter-type pps
 police mode sr_tcm red drop
!
copp-action copp-system-udld
 set trap-action trap
 set trap-queue 22
 set trap-priority 22
 police cir 500 cbs 500
 police meter-type pps
 police mode sr_tcm red drop
!
copp-action copp-system-vrrp
 set trap-action trap
 set trap-queue 17
 set trap-priority 17
 police cir 500 cbs 500
 police meter-type pps
 police mode sr_tcm red drop
!
copp-action default
 set trap-queue 0
 police cir 100 cbs 100
 police meter-type pps
 police mode sr_tcm red drop
!
policy-map copp-system-policy type copp
 class default priority 0
  set copp-action default
 !
 class copp-system-vrrp priority 0
  set copp-action copp-system-vrrp
 !
 class copp-system-udld priority 0
  set copp-action copp-system-udld
 !
 class copp-system-ttl priority 0
  set copp-action copp-system-ttl
 !
 class copp-system-suppress priority 0
  set copp-action copp-system-suppress
 !
 class copp-system-subnet priority 0
  set copp-action copp-system-subnet
 !
 class copp-system-stp priority 0
  set copp-action copp-system-stp
 !
 class copp-system-sflow priority 0
  set copp-action copp-system-sflow
 !
 class copp-system-pim priority 0
  set copp-action copp-system-pim
```

```
  !
  class copp-system-ospf priority 0
   set copp-action copp-system-ospf
  !
  class copp-system-nat priority 0
   set copp-action copp-system-nat
  !
  class copp-system-mtu priority 0
   set copp-action copp-system-mtu
  !
  class copp-system-lldp priority 0
   set copp-action copp-system-lldp
  !
  class copp-system-lacp priority 0
   set copp-action copp-system-lacp
  !
  class copp-system-ip2me priority 0
   set copp-action copp-system-ip2me
  !
  class copp-system-igmp priority 0
   set copp-action copp-system-igmp
  !
  class copp-system-icmp priority 0
   set copp-action copp-system-icmp
  !
  class copp-system-iccp priority 0
   set copp-action copp-system-iccp
  !
  class copp-system-dhcpl2 priority 0
   set copp-action copp-system-dhcp
  !
  class copp-system-dhcp priority 0
   set copp-action copp-system-dhcp
  !
  class copp-system-bgp priority 0
   set copp-action copp-system-bgp
  !
  class copp-system-bfd priority 0
   set copp-action copp-system-bfd
  !
  class copp-system-arp priority 0
   set copp-action copp-system-arp
  !
 !
 policy-map oob-qos-policy type qos
  description "QoS Ratelimiting policy for OOB port"
  class class-oob-dhcp-client priority 1020
   police cir 512000
  !
  class class-oob-dhcp-server priority 1015
   police cir 512000
  !
  class class-oob-arp priority 1010
   police cir 256000
  !
  class class-oob-ipv6-multicast priority 1005
   police cir 256000
  !
  class class-oob-ip-multicast priority 1000
   police cir 256000
  !
```

Fabric B Leaf1

```
!
ip load-share hash ipv4 ipv4-src-ip
ip load-share hash ipv4 ipv4-dst-ip
ip load-share hash ipv4 ipv4-ip-proto
ip load-share hash ipv4 ipv4-l4-dst-port
ip load-share hash ipv4 ipv4-l4-src-port
ip load-share hash ipv6 ipv6-src-ip
ip  load-share  hash  ipv6  ipv6-dst-ip
ip load-share hash ipv6 ipv6-next-hdr
ip load-share hash ipv6 ipv6-l4-src-port
ip load-share hash ipv6 ipv6-l4-dst-port
ssh-server vrf mgmt
mac address-table aging-time 600
kdump enable
kdump memory 0M-2G:256M,2G-4G:256M,4G-8G:384M,8G-:448M
kdump num-dumps 3

ip anycast-mac-address 00:22:22:22:22:22
ip anycast-address enable
ipv6 anycast-address enable
core enable
lldp system-name Fabric-B-Leaf1
factory default profile l3 confirm
port-group 1 speed 25000
port-group 2 speed 25000
port-group 3 speed 25000
port-group 4 speed 25000
port-group 5 speed 25000
port-group 6 speed 25000
port-group 7 speed 25000
port-group 8 speed 25000
port-group 9 speed 25000
port-group 10 speed 25000
port-group 11 speed 25000
port-group 12 speed 25000
ip vrf mgmt
ip vrf VrfTenant1
!
ip vrf VrfTenant2
!
!
!
nat
 timeout 600
 tcp-timeout 86400
 udp-timeout 300
!
tam
!
qos scheduler-policy copp-scheduler-policy
 !
 queue 0
  type wrr
  weight 1
 !
 queue 1
  meter-type packets
  pir 100
  type wrr
  weight 1
 !
 queue 2
  meter-type packets
  pir 600
  type wrr
  weight 2
 !
 queue 3
  meter-type packets
```

```
 pir 8000
 type wrr
 weight 1
!
queue 4
 meter-type packets
 pir 500
 type wrr
 weight 1
!
queue 5
 meter-type packets
 pir 300
 type wrr
 weight 1
!
queue 6
 meter-type packets
 pir 2000
 type wrr
 weight 2
!
queue 7
 meter-type packets
 pir 6000
 type wrr
 weight 2
!
queue 8
 meter-type packets
 pir 1000
 type wrr
 weight 2
!
queue 9
 meter-type packets
 pir 300
 type wrr
 weight 2
!
queue 10
 meter-type packets
 pir 3000
 type wrr
 weight 2
!
queue 11
 meter-type packets
 pir 3000
 type wrr
 weight 2
!
queue 12
 meter-type packets
 pir 2000
 type wrr
 weight 2
!
queue 13
 meter-type packets
 pir 5000
 type wrr
 weight 2
!
queue 14
 meter-type packets
 pir 10000
 type wrr
 weight 6
!
queue 15
 meter-type packets
```

```
  pir 5000
  type wrr
  weight 4
 !
 queue 16
  meter-type packets
  pir 5000
  type wrr
  weight 4
 !
 queue 17
  meter-type packets
  pir 500
  type wrr
  weight 2
 !
 queue 18
  meter-type packets
  pir 500
  type wrr
  weight 2
 !
 queue 19
  meter-type packets
  pir 5000
  type wrr
  weight 3
 !
 queue 20
  meter-type packets
  pir 1500
  type wrr
  weight 10
 !
 queue 21
  meter-type packets
  pir 16000
  type wrr
  weight 30
 !
 queue 22
  meter-type packets
  pir 500
  type wrr
  weight 10
 !
 queue 23
  meter-type packets
  pir 500
  type wrr
  weight 10
 !
 port
  meter-type packets
!
hardware
 !
 access-list
  counters per-entry
 !
 tcam
!
line vty
 service-policy type qos in oob-qos-policy
!
interface Vlan101
 description "Tenant-1 Compute VM"
 neigh-suppress
 ip vrf forwarding VrfTenant1
 ip anycast-address 192.168.50.254/24
!
interface Vlan201
```

```
 description "Tenant-2 Compute VM"
 neigh-suppress
 ip vrf forwarding VrfTenant2
 ip anycast-address 192.168.60.254/24
!
interface Vlan3101
 description "Vlan for VNI to VRF mapping"
 neigh-suppress
 ip vrf forwarding VrfTenant1
!
interface Vlan3102
 description "Vlan for VNI to VRF mapping"
 neigh-suppress
 ip vrf forwarding VrfTenant2
!
interface Loopback 0
 description Router-ID
 ip address 10.0.2.1/32
!
interface Loopback 1
 description nve_loopback
 ip address 10.201.201.1/32
!
interface Management 0
 description Management0
 mtu 1500
 autoneg on
 speed 1000
!
interface Ethernet0
 description "Connected to Tenant-1 Compute"
 mtu 9100
 speed 25000
 no shutdown
 switchport access Vlan 101
!
interface Ethernet1
 description "Connected to Tenant-2 Compute"
 mtu 9100
 speed 25000
 no shutdown
 switchport access Vlan 201
!
interface Ethernet2
 mtu 9100
 speed 25000
 shutdown
!
interface Ethernet3
 mtu 9100
 speed 25000
 shutdown
!
interface Ethernet4
 mtu 9100
 speed 25000
 shutdown
!
interface Ethernet5
 mtu 9100
 speed 25000
 shutdown
!
interface Ethernet6
 mtu 9100
 speed 25000
 shutdown
!
interface Ethernet7
 mtu 9100
 speed 25000
 shutdown
```

```
!
interface Ethernet8
 mtu 9100
 speed 25000
 shutdown
!
interface Ethernet9
 mtu 9100
 speed 25000
 shutdown
!
interface Ethernet10
 mtu 9100
 speed 25000
 shutdown
!
interface Ethernet11
 mtu 9100
 speed 25000
 shutdown
!
interface Ethernet12
 mtu 9100
 speed 25000
 shutdown
!
interface Ethernet13
 mtu 9100
 speed 25000
 shutdown
!
interface Ethernet14
 mtu 9100
 speed 25000
 shutdown
!
interface Ethernet15
 mtu 9100
 speed 25000
 shutdown
!
interface Ethernet16
 mtu 9100
 speed 25000
 shutdown
!
interface Ethernet17
 mtu 9100
 speed 25000
 shutdown
!
interface Ethernet18
 mtu 9100
 speed 25000
 shutdown
!
interface Ethernet19
 mtu 9100
 speed 25000
 shutdown
!
interface Ethernet20
 mtu 9100
 speed 25000
 shutdown
!
interface Ethernet21
 mtu 9100
 speed 25000
 shutdown
!
interface Ethernet22
```

```
 mtu 9100
 speed 25000
 shutdown
!
interface Ethernet23
 mtu 9100
 speed 25000
 shutdown
!
interface Ethernet24
 mtu 9100
 speed 25000
 shutdown
!
interface Ethernet25
 mtu 9100
 speed 25000
 shutdown
!
interface Ethernet26
 mtu 9100
 speed 25000
 shutdown
!
interface Ethernet27
 mtu 9100
 speed 25000
 shutdown
!
interface Ethernet28
 mtu 9100
 speed 25000
 shutdown
!
interface Ethernet29
 mtu 9100
 speed 25000
 shutdown
!
interface Ethernet30
 mtu 9100
 speed 25000
 shutdown
!
interface Ethernet31
 mtu 9100
 speed 25000
 shutdown
!
interface Ethernet32
 mtu 9100
 speed 25000
 shutdown
!
interface Ethernet33
 mtu 9100
 speed 25000
 shutdown
!
interface Ethernet34
 mtu 9100
 speed 25000
 shutdown
!
interface Ethernet35
 mtu 9100
 speed 25000
 shutdown
!
interface Ethernet36
 mtu 9100
 speed 25000
```

```
 shutdown
!
interface Ethernet37
 mtu 9100
 speed 25000
 shutdown
!
interface Ethernet38
 mtu 9100
 speed 25000
 shutdown
!
interface Ethernet39
 mtu 9100
 speed 25000
 shutdown
!
interface Ethernet40
 mtu 9100
 speed 25000
 shutdown
!
interface Ethernet41
 mtu 9100
 speed 25000
 shutdown
!
interface Ethernet42
 mtu 9100
 speed 25000
 shutdown
!
interface Ethernet43
 mtu 9100
 speed 25000
 shutdown
!
interface Ethernet44
 mtu 9100
 speed 25000
 shutdown
!
interface Ethernet45
 mtu 9100
 speed 25000
 shutdown
!
interface Ethernet46
 mtu 9100
 speed 25000
 shutdown
!
interface Ethernet47
 mtu 9100
 speed 25000
 shutdown
!
interface Ethernet48
 mtu 9100
 speed 100000
 shutdown
!
interface Ethernet52
 mtu 9100
 speed 100000
 shutdown
!
interface Ethernet56
 mtu 9100
 speed 100000
 shutdown
!
```

```
interface Ethernet60
 mtu 9100
 speed 100000
 shutdown
!
interface Ethernet64
 description "Connected to Spine1"
 mtu 9100
 speed 100000
 no shutdown
 ipv6 enable
!
interface Ethernet68
 mtu 9100
 speed 100000
 shutdown
!
interface Ethernet72
 mtu 9100
 speed 100000
 shutdown
!
interface Ethernet76
 mtu 9100
 speed 100000
 shutdown
!
router bgp 64601 vrf VrfTenant1
 router-id 10.0.2.1
 log-neighbor-changes
 timers 60 180
 !
 address-family ipv4 unicast
  redistribute connected
  maximum-paths 128
  maximum-paths ibgp 1
 !
 address-family l2vpn evpn
  advertise ipv4 unicast
!
router bgp 64601 vrf VrfTenant2
 router-id 10.0.2.11
 log-neighbor-changes
 timers 60 180
 !
 address-family ipv4 unicast
  redistribute connected
  maximum-paths 128
  maximum-paths ibgp 1
 !
 address-family l2vpn evpn
  advertise ipv4 unicast
!
router bgp 64601
 router-id 10.0.2.1
 log-neighbor-changes
 bestpath as-path multipath-relax
 timers 60 180
 !
 address-family ipv4 unicast
  redistribute connected
  maximum-paths 128
  maximum-paths ibgp 1
 !
 address-family l2vpn evpn
  advertise-all-vni
 !
 peer-group spine
  remote-as external
  timers connect 30
  advertisement-interval 0
  bfd
```

```
  capability extended-nexthop
  !
  address-family ipv4 unicast
   activate
   allowas-in 2
   send-community both
  !
  address-family l2vpn evpn
   activate
 !
 neighbor interface Ethernet64
  peer-group spine
!
interface vxlan vtep1
 source-ip 10.201.201.1
 map vni 20101 vlan 101
 map vni 20201 vlan 201
 map vni 203101 vlan 3101
 map vni 203102 vlan 3102
 map vni 203101 vrf VrfTenant1
 map vni 203102 vrf VrfTenant2
!
class-map class-oob-arp match-type fields match-all
 match ethertype arp
!
class-map class-oob-dhcp-client match-type fields match-all
 match ethertype ip
 match ip protocol udp
 match destination-port eq 68
!
class-map class-oob-dhcp-server match-type fields match-all
 match ethertype ip
 match ip protocol udp
 match destination-port eq 67
!
class-map class-oob-ip-multicast match-type fields match-all
 match ethertype ip
 match destination-address ip 224.0.0.0/4
!
class-map class-oob-ipv6-multicast match-type fields match-all
 match ethertype 0x86DD
 match destination-address ipv6 ff00::/8
!
class-map copp-system-arp match-type copp
 match protocol arp_req
 match protocol arp_resp
 match protocol neigh discovery
!
class-map copp-system-bfd match-type copp
 match protocol bfd
 match protocol bfdv6
!
class-map copp-system-bgp match-type copp
 match protocol bgp
 match protocol bgpv6
!
class-map copp-system-dhcp match-type copp
 match protocol dhcp
 match protocol dhcpv6
!
class-map copp-system-dhcpl2 match-type copp
 match protocol dhcp_l2
 match protocol dhcpv6_l2
!
class-map copp-system-iccp match-type copp
 match protocol iccp
!
class-map copp-system-icmp match-type copp
 match protocol icmp
 match protocol icmpv6
!
class-map copp-system-igmp match-type copp
```

```
 match protocol igmp_query
!
class-map copp-system-ip2me match-type copp
 match protocol ip2me
!
class-map copp-system-lacp match-type copp
 match protocol lacp
!
class-map copp-system-lldp match-type copp
 match protocol lldp
!
class-map copp-system-mtu match-type copp
 match protocol l3_mtu_error
!
class-map copp-system-nat match-type copp
 match protocol src_nat_miss
 match protocol dest_nat_miss
!
class-map copp-system-ospf match-type copp
 match protocol ospf
!
class-map copp-system-pim match-type copp
 match protocol pim
!
class-map copp-system-sflow match-type copp
 match protocol sample_packet
!
class-map copp-system-stp match-type copp
 match protocol stp
 match protocol pvrst
!
class-map copp-system-subnet match-type copp
 match protocol subnet
!
class-map copp-system-suppress match-type copp
 match protocol arp_suppress
 match protocol nd_suppress
!
class-map copp-system-ttl match-type copp
 match protocol ttl_error
!
class-map copp-system-udld match-type copp
 match protocol udld
!
class-map copp-system-vrrp match-type copp
 match protocol vrrp
 match protocol vrrpv6
!
class-map default match-type any
!
copp-action copp-system-arp
 set trap-action copy
 set trap-queue 10
 set trap-priority 10
 police cir 3000 cbs 3000
 police meter-type pps
 police mode sr_tcm red drop
!
copp-action copp-system-bfd
 set trap-action trap
 set trap-queue 20
 set trap-priority 20
 police cir 1500 cbs 1500
 police meter-type pps
 police mode sr_tcm red drop
!
copp-action copp-system-bgp
 set trap-action trap
 set trap-queue 14
 set trap-priority 14
 police cir 10000 cbs 10000
 police meter-type pps
```

```
 police mode sr_tcm red drop
!
copp-action copp-system-dhcp
 set trap-action trap
 set trap-queue 9
 set trap-priority 9
 police cir 300 cbs 300
 police meter-type pps
 police mode sr_tcm red drop
!
copp-action copp-system-iccp
 set trap-action trap
 set trap-queue 16
 set trap-priority 16
 police cir 5000 cbs 5000
 police meter-type pps
 police mode sr_tcm red drop
!
copp-action copp-system-icmp
 set trap-action trap
 set trap-queue 8
 set trap-priority 8
 police cir 1000 cbs 1000
 police meter-type pps
 police mode sr_tcm red drop
!
copp-action copp-system-igmp
 set trap-action trap
 set trap-queue 12
 set trap-priority 12
 police cir 2000 cbs 2000
 police meter-type pps
 police mode sr_tcm red drop
!
copp-action copp-system-ip2me
 set trap-action trap
 set trap-queue 7
 set trap-priority 7
 police cir 6000 cbs 6000
 police meter-type pps
 police mode sr_tcm red drop
!
copp-action copp-system-lacp
 set trap-action trap
 set trap-queue 23
 set trap-priority 23
 police cir 500 cbs 500
 police meter-type pps
 police mode sr_tcm red drop
!
copp-action copp-system-lldp
 set trap-action trap
 set trap-queue 18
 set trap-priority 18
 police cir 500 cbs 500
 police meter-type pps
 police mode sr_tcm red drop
!
copp-action copp-system-mtu
 set trap-action trap
 set trap-queue 4
 set trap-priority 4
 police cir 500 cbs 500
 police meter-type pps
 police mode sr_tcm red drop
!
copp-action copp-system-nat
 set trap-action trap
 set trap-queue 5
 set trap-priority 5
 police cir 300 cbs 300
 police meter-type pps
```

```
 police mode sr_tcm red drop
!
copp-action copp-system-ospf
 set trap-action copy
 set trap-queue 15
 set trap-priority 15
 police cir 5000 cbs 5000
 police meter-type pps
 police mode sr_tcm red drop
!
copp-action copp-system-pim
 set trap-action trap
 set trap-queue 13
 set trap-priority 13
 police cir 5000 cbs 5000
 police meter-type pps
 police mode sr_tcm red drop
!
copp-action copp-system-sflow
 set trap-action trap
 set trap-queue 3
 set trap-priority 3
 police cir 8000 cbs 8000
 police meter-type pps
 police mode sr_tcm red drop
!
copp-action copp-system-stp
 set trap-action trap
 set trap-queue 21
 set trap-priority 21
 police cir 16000 cbs 16000
 police meter-type pps
 police mode sr_tcm red drop
!
copp-action copp-system-subnet
 set trap-action trap
 set trap-queue 6
 set trap-priority 6
 police cir 2000 cbs 2000
 police meter-type pps
 police mode sr_tcm red drop
!
copp-action copp-system-suppress
 set trap-action trap
 set trap-queue 11
 set trap-priority 11
 police cir 3000 cbs 3000
 police meter-type pps
 police mode sr_tcm red drop
!
copp-action copp-system-ttl
 set trap-action trap
 set trap-queue 0
 set trap-priority 0
 police cir 100 cbs 100
 police meter-type pps
 police mode sr_tcm red drop
!
copp-action copp-system-udld
 set trap-action trap
 set trap-queue 22
 set trap-priority 22
 police cir 500 cbs 500
 police meter-type pps
 police mode sr_tcm red drop
!
copp-action copp-system-vrrp
 set trap-action trap
 set trap-queue 17
 set trap-priority 17
 police cir 500 cbs 500
 police meter-type pps
```

```
 police mode sr_tcm red drop
!
copp-action default
 set trap-queue 0
 police cir 100 cbs 100
 police meter-type pps
 police mode sr_tcm red drop
!
policy-map copp-system-policy type copp
 class default priority 0
  set copp-action default
 !
 class copp-system-vrrp priority 0
  set copp-action copp-system-vrrp
 !
 class copp-system-udld priority 0
  set copp-action copp-system-udld
 !
 class copp-system-ttl priority 0
  set copp-action copp-system-ttl
 !
 class copp-system-suppress priority 0
  set copp-action copp-system-suppress
 !
 class copp-system-subnet priority 0
  set copp-action copp-system-subnet
 !
 class copp-system-stp priority 0
  set copp-action copp-system-stp
 !
 class copp-system-sflow priority 0
  set copp-action copp-system-sflow
 !
 class copp-system-pim priority 0
  set copp-action copp-system-pim
 !
 class copp-system-ospf priority 0
  set copp-action copp-system-ospf
 !
 class copp-system-nat priority 0
  set copp-action copp-system-nat
 !
 class copp-system-mtu priority 0
  set copp-action copp-system-mtu
 !
 class copp-system-lldp priority 0
  set copp-action copp-system-lldp
 !
 class copp-system-lacp priority 0
  set copp-action copp-system-lacp
 !
 class copp-system-ip2me priority 0
  set copp-action copp-system-ip2me
 !
 class copp-system-igmp priority 0
  set copp-action copp-system-igmp
 !
 class copp-system-icmp priority 0
  set copp-action copp-system-icmp
 !
 class copp-system-iccp priority 0
  set copp-action copp-system-iccp
 !
 class copp-system-dhcpl2 priority 0
  set copp-action copp-system-dhcp
 !
 class copp-system-dhcp priority 0
  set copp-action copp-system-dhcp
 !
 class copp-system-bgp priority 0
  set copp-action copp-system-bgp
 !
```

```
 class copp-system-bfd priority 0
  set copp-action copp-system-bfd
 !
 class copp-system-arp priority 0
  set copp-action copp-system-arp
 !
!
policy-map oob-qos-policy type qos
 description "QoS Ratelimiting policy for OOB port"
 class class-oob-dhcp-client priority 1020
  police cir 512000
 !
 class class-oob-dhcp-server priority 1015
  police cir 512000
 !
 class class-oob-arp priority 1010
  police cir 256000
 !
 class class-oob-ipv6-multicast priority 1005
  police cir 256000
 !
 class class-oob-ip-multicast priority 1000
  police cir 256000
 !
```

Fabric B BL1

```
!
ip load-share hash ipv4 ipv4-dst-ip
ip load-share hash ipv4 ipv4-src-ip
ip load-share hash ipv4 ipv4-ip-proto
ip load-share hash ipv4 ipv4-l4-dst-port
ip load-share hash ipv4 ipv4-l4-src-port
ip load-share hash ipv6 ipv6-dst-ip
ip  load-share  hash  ipv6  ipv6-src-ip
ip load-share hash ipv6 ipv6-next-hdr
ip load-share hash ipv6 ipv6-l4-src-port
ip load-share hash ipv6 ipv6-l4-dst-port
ssh-server vrf mgmt
mac address-table aging-time 600
kdump enable
kdump memory 0M-2G:256M,2G-4G:256M,4G-8G:384M,8G-:448M
kdump num-dumps 3

ip anycast-mac-address 00:22:22:22:22:22
ip anycast-address enable
ipv6 anycast-address enable
core enable
lldp system-name Fabric-B-BL1
factory default profile l3 confirm
ip vrf mgmt
ip vrf VrfTenant1
!
ip vrf VrfTenant2
!
!
!
nat
 timeout 600
 tcp-timeout 86400
 udp-timeout 300
!
tam
!
qos scheduler-policy copp-scheduler-policy
 !
 queue 0
  type wrr
```

```
 weight 1
!
queue 1
 meter-type packets
 pir 100
 type wrr
 weight 1
!
queue 2
 meter-type packets
 pir 600
 type wrr
 weight 2
!
queue 3
 meter-type packets
 pir 8000
 type wrr
 weight 1
!
queue 4
 meter-type packets
 pir 500
 type wrr
 weight 1
!
queue 5
 meter-type packets
 pir 300
 type wrr
 weight 1
!
queue 6
 meter-type packets
 pir 2000
 type wrr
 weight 2
!
queue 7
 meter-type packets
 pir 6000
 type wrr
 weight 2
!
queue 8
 meter-type packets
 pir 1000
 type wrr
 weight 2
!
queue 9
 meter-type packets
 pir 300
 type wrr
 weight 2
!
queue 10
 meter-type packets
 pir 3000
 type wrr
 weight 2
!
queue 11
 meter-type packets
 pir 3000
 type wrr
 weight 2
!
queue 12
 meter-type packets
 pir 2000
 type wrr
```

```
  weight 2
 !
 queue 13
  meter-type packets
  pir 5000
  type wrr
  weight 2
 !
 queue 14
  meter-type packets
  pir 10000
  type wrr
  weight 6
 !
 queue 15
  meter-type packets
  pir 5000
  type wrr
  weight 4
 !
 queue 16
  meter-type packets
  pir 5000
  type wrr
  weight 4
 !
 queue 17
  meter-type packets
  pir 500
  type wrr
  weight 2
 !
 queue 18
  meter-type packets
  pir 500
  type wrr
  weight 2
 !
 queue 19
  meter-type packets
  pir 5000
  type wrr
  weight 3
 !
 queue 20
  meter-type packets
  pir 1500
  type wrr
  weight 10
 !
 queue 21
  meter-type packets
  pir 16000
  type wrr
  weight 30
 !
 queue 22
  meter-type packets
  pir 500
  type wrr
  weight 10
 !
 queue 23
  meter-type packets
  pir 500
  type wrr
  weight 10
 !
 port
  meter-type packets
!
hardware
```

```
 !
 access-list
  counters per-entry
 !
 tcam
!
line vty
 service-policy type qos in oob-qos-policy
!
interface Vlan101
 description "Tenant-1 Compute VM"
 neigh-suppress
 ip vrf forwarding VrfTenant1
 ip anycast-address 192.168.50.254/24
!
interface Vlan201
 description "Tenant-2 Compute VM"
 neigh-suppress
 ip vrf forwarding VrfTenant2
 ip anycast-address 192.168.60.254/24
!
interface Vlan3101
 description "Vlan for VNI to VRF mapping"
 neigh-suppress
 ip vrf forwarding VrfTenant1
!
interface Vlan3102
 description "Vlan for VNI to VRF mapping"
 neigh-suppress
 ip vrf forwarding VrfTenant2
!
interface Loopback 0
 description Router-ID
 ip address 10.0.2.12/32
!
interface Loopback 1
 description nve_loopback
 ip address 10.201.201.12/32
!
interface Loopback 2
 description "Multi-Site External VTEP IP"
 ip address 10.211.211.12/32
!
interface Management 0
 description Management0
 mtu 1500
 autoneg on
 speed 1000
!
interface Ethernet0
 description "Connected to Tenant-1,2 Compute"
 mtu 9100
 speed 100000
 no shutdown
 switchport access Vlan 101
!
interface Ethernet4
 description "Connected to Tenant-2 Compute"
 mtu 9100
 speed 100000
 no shutdown
 switchport access Vlan 201
!
interface Ethernet8
 mtu 9100
 speed 100000
 shutdown
!
interface Ethernet12
 mtu 9100
 speed 100000
 shutdown
```

```
!
interface Ethernet16
 mtu 9100
 speed 100000
 shutdown
!
interface Ethernet20
 mtu 9100
 speed 100000
 shutdown
!
interface Ethernet24
 mtu 9100
 speed 100000
 shutdown
!
interface Ethernet28
 mtu 9100
 speed 100000
 shutdown
!
interface Ethernet32
 mtu 9100
 speed 100000
 shutdown
!
interface Ethernet36
 mtu 9100
 speed 100000
 shutdown
!
interface Ethernet40
 mtu 9100
 speed 100000
 shutdown
!
interface Ethernet44
 mtu 9100
 speed 100000
 shutdown
!
interface Ethernet48
 mtu 9100
 speed 100000
 shutdown
!
interface Ethernet52
 mtu 9100
 speed 100000
 shutdown
!
interface Ethernet56
 mtu 9100
 speed 100000
 shutdown
!
interface Ethernet60
 mtu 9100
 speed 100000
 shutdown
!
interface Ethernet64
 mtu 9100
 speed 100000
 shutdown
!
interface Ethernet68
 mtu 9100
 speed 100000
 shutdown
!
interface Ethernet72
```

```
 mtu 9100
 speed 100000
 shutdown
!
interface Ethernet76
 mtu 9100
 speed 100000
 shutdown
!
interface Ethernet80
 mtu 9100
 speed 100000
 shutdown
!
interface Ethernet84
 mtu 9100
 speed 100000
 shutdown
!
interface Ethernet88
 mtu 9100
 speed 100000
 shutdown
!
interface Ethernet92
 description "Connected to FabricB BL1"
 mtu 9100
 speed 100000
 no shutdown
 ipv6 enable
!
interface Ethernet96
 description "Connected to Spine1"
 mtu 9100
 speed 100000
 no shutdown
 ipv6 enable
!
interface Ethernet100
 mtu 9100
 speed 100000
 shutdown
!
interface Ethernet104
 mtu 9100
 speed 100000
 shutdown
!
interface Ethernet108
 mtu 9100
 speed 100000
 shutdown
!
interface Ethernet112
 mtu 9100
 speed 100000
 shutdown
!
interface Ethernet116
 mtu 9100
 speed 100000
 shutdown
!
interface Ethernet120
 mtu 9100
 speed 100000
 shutdown
!
interface Ethernet124
 mtu 9100
 speed 100000
 shutdown
```

```
!
interface Ethernet128
 mtu 9100
 speed 10000
 shutdown
!
interface Ethernet129
 mtu 9100
 speed 10000
 shutdown
!
router bgp 64612 vrf VrfTenant1
 router-id 10.0.2.12
 log-neighbor-changes
 timers 60 180
 !
 address-family ipv4 unicast
  redistribute connected
  maximum-paths 128
  maximum-paths ibgp 1
 !
 address-family l2vpn evpn
  advertise ipv4 unicast
  default-originate ipv4
  rd 64612:1
  route-target both auto
  route-target import 103101:1
  route-target export 203101:1
!
router bgp 64612 vrf VrfTenant2
 router-id 10.0.2.12
 log-neighbor-changes
 timers 60 180
 !
 address-family ipv4 unicast
  redistribute connected
  maximum-paths 128
  maximum-paths ibgp 1
 !
 address-family l2vpn evpn
  advertise ipv4 unicast
  default-originate ipv4
  rd 64612:2
  route-target both auto
  route-target import 103102:1
  route-target export 203102:1
!
router bgp 64612
 router-id 10.0.2.12
 log-neighbor-changes
 bestpath as-path multipath-relax
 timers 60 180
 !
 address-family ipv4 unicast
  redistribute connected
  maximum-paths 128
  maximum-paths ibgp 1
 !
 address-family l2vpn evpn
  advertise-all-vni
  !
  vni 20101
   route-target both auto
   route-target import 10101:101
   route-target export 20101:101
  !
  vni 20201
   route-target both auto
   route-target import 10201:201
   route-target export 20201:201
 !
 peer-group external
```

```
   remote-as external
   timers connect 30
   advertisement-interval 0
   capability extended-nexthop
   !
   address-family ipv4 unicast
    activate
    send-community both
   !
   address-family l2vpn evpn
    activate
    fabric-external
  !
  peer-group spine
   remote-as external
   timers connect 30
   advertisement-interval 0
   bfd
   capability extended-nexthop
   !
   address-family ipv4 unicast
    activate
    allowas-in 2
    send-community both
   !
   address-family l2vpn evpn
    activate
  !
  neighbor interface Ethernet92
   description "DCI Multi-Site Neighbor"
   peer-group external
  !
  neighbor interface Ethernet96
   peer-group spine
!
interface vxlan vtep12
 source-ip 10.201.201.12
 external-ip 10.211.211.12
 vni-downstream external
 map vni 20101 vlan 101
 map vni 20201 vlan 201
 map vni 203101 vlan 3101
 map vni 203102 vlan 3102
 map vni 203101 vrf VrfTenant1
 map vni 203102 vrf VrfTenant2
!
class-map class-oob-arp match-type fields match-all
 match ethertype arp
!
class-map class-oob-dhcp-client match-type fields match-all
 match ethertype ip
 match ip protocol udp
 match destination-port eq 68
!
class-map class-oob-dhcp-server match-type fields match-all
 match ethertype ip
 match ip protocol udp
 match destination-port eq 67
!
class-map class-oob-ip-multicast match-type fields match-all
 match ethertype ip
 match destination-address ip 224.0.0.0/4
!
class-map class-oob-ipv6-multicast match-type fields match-all
 match ethertype 0x86DD
 match destination-address ipv6 ff00::/8
!
class-map copp-system-arp match-type copp
 match protocol arp_req
 match protocol arp_resp
 match protocol neigh_discovery
!
```

```
class-map copp-system-bfd match-type copp
 match protocol bfd
 match protocol bfdv6
!
class-map copp-system-bgp match-type copp
 match protocol bgp
 match protocol bgpv6
!
class-map copp-system-dhcp match-type copp
 match protocol dhcp
 match protocol dhcpv6
!
class-map copp-system-dhcpl2 match-type copp
 match protocol dhcp_l2
 match protocol dhcpv6_l2
!
class-map copp-system-iccp match-type copp
 match protocol iccp
!
class-map copp-system-icmp match-type copp
 match protocol icmp
 match protocol icmpv6
!
class-map copp-system-igmp match-type copp
 match protocol igmp_query
!
class-map copp-system-ip2me match-type copp
 match protocol ip2me
!
class-map copp-system-lacp match-type copp
 match protocol lacp
!
class-map copp-system-lldp match-type copp
 match protocol lldp
!
class-map copp-system-mtu match-type copp
 match protocol l3_mtu_error
!
class-map copp-system-nat match-type copp
 match protocol src_nat_miss
 match protocol dest_nat_miss
!
class-map copp-system-ospf match-type copp
 match protocol ospf
!
class-map copp-system-pim match-type copp
 match protocol pim
!
class-map copp-system-sflow match-type copp
 match protocol sample_packet
!
class-map copp-system-stp match-type copp
 match protocol stp
 match protocol pvrst
!
class-map copp-system-subnet match-type copp
 match protocol subnet
!
class-map copp-system-suppress match-type copp
 match protocol arp_suppress
 match protocol nd_suppress
!
class-map copp-system-ttl match-type copp
 match protocol ttl_error
!
class-map copp-system-udld match-type copp
 match protocol udld
!
class-map copp-system-vrrp match-type copp
 match protocol vrrp
 match protocol vrrpv6
!
```

```
class-map default match-type any
!
copp-action copp-system-arp
 set trap-action copy
 set trap-queue 10
 set trap-priority 10
 police cir 3000 cbs 3000
 police meter-type pps
 police mode sr_tcm red drop
!
copp-action copp-system-bfd
 set trap-action trap
 set trap-queue 20
 set trap-priority 20
 police cir 1500 cbs 1500
 police meter-type pps
 police mode sr_tcm red drop
!
copp-action copp-system-bgp
 set trap-action trap
 set trap-queue 14
 set trap-priority 14
 police cir 10000 cbs 10000
 police meter-type pps
 police mode sr_tcm red drop
!
copp-action copp-system-dhcp
 set trap-action trap
 set trap-queue 9
 set trap-priority 9
 police cir 300 cbs 300
 police meter-type pps
 police mode sr_tcm red drop
!
copp-action copp-system-iccp
 set trap-action trap
 set trap-queue 16
 set trap-priority 16
 police cir 5000 cbs 5000
 police meter-type pps
 police mode sr_tcm red drop
!
copp-action copp-system-icmp
 set trap-action trap
 set trap-queue 8
 set trap-priority 8
 police cir 1000 cbs 1000
 police meter-type pps
 police mode sr_tcm red drop
!
copp-action copp-system-igmp
 set trap-action trap
 set trap-queue 12
 set trap-priority 12
 police cir 2000 cbs 2000
 police meter-type pps
 police mode sr_tcm red drop
!
copp-action copp-system-ip2me
 set trap-action trap
 set trap-queue 7
 set trap-priority 7
 police cir 6000 cbs 6000
 police meter-type pps
 police mode sr_tcm red drop
!
copp-action copp-system-lacp
 set trap-action trap
 set trap-queue 23
 set trap-priority 23
 police cir 500 cbs 500
 police meter-type pps
```

```
 police mode sr_tcm red drop
!
copp-action copp-system-lldp
 set trap-action trap
 set trap-queue 18
 set trap-priority 18
 police cir 500 cbs 500
 police meter-type pps
 police mode sr_tcm red drop
!
copp-action copp-system-mtu
 set trap-action trap
 set trap-queue 4
 set trap-priority 4
 police cir 500 cbs 500
 police meter-type pps
 police mode sr_tcm red drop
!
copp-action copp-system-nat
 set trap-action trap
 set trap-queue 5
 set trap-priority 5
 police cir 300 cbs 300
 police meter-type pps
 police mode sr_tcm red drop
!
copp-action copp-system-ospf
 set trap-action copy
 set trap-queue 15
 set trap-priority 15
 police cir 5000 cbs 5000
 police meter-type pps
 police mode sr_tcm red drop
!
copp-action copp-system-pim
 set trap-action trap
 set trap-queue 13
 set trap-priority 13
 police cir 5000 cbs 5000
 police meter-type pps
 police mode sr_tcm red drop
!
copp-action copp-system-sflow
 set trap-action trap
 set trap-queue 3
 set trap-priority 3
 police cir 8000 cbs 8000
 police meter-type pps
 police mode sr_tcm red drop
!
copp-action copp-system-stp
 set trap-action trap
 set trap-queue 21
 set trap-priority 21
 police cir 16000 cbs 16000
 police meter-type pps
 police mode sr_tcm red drop
!
copp-action copp-system-subnet
 set trap-action trap
 set trap-queue 6
 set trap-priority 6
 police cir 2000 cbs 2000
 police meter-type pps
 police mode sr_tcm red drop
!
copp-action copp-system-suppress
 set trap-action trap
 set trap-queue 11
 set trap-priority 11
 police cir 3000 cbs 3000
 police meter-type pps
```

```
 police mode sr_tcm red drop
!
copp-action copp-system-ttl
 set trap-action trap
 set trap-queue 0
 set trap-priority 0
 police cir 100 cbs 100
 police meter-type pps
 police mode sr_tcm red drop
!
copp-action copp-system-udld
 set trap-action trap
 set trap-queue 22
 set trap-priority 22
 police cir 500 cbs 500
 police meter-type pps
 police mode sr_tcm red drop
!
copp-action copp-system-vrrp
 set trap-action trap
 set trap-queue 17
 set trap-priority 17
 police cir 500 cbs 500
 police meter-type pps
 police mode sr_tcm red drop
!
copp-action default
 set trap-queue 0
 police cir 100 cbs 100
 police meter-type pps
 police mode sr_tcm red drop
!
policy-map copp-system-policy type copp
 class default priority 0
  set copp-action default
 !
 class copp-system-vrrp priority 0
  set copp-action copp-system-vrrp
 !
 class copp-system-udld priority 0
  set copp-action copp-system-udld
 !
 class copp-system-ttl priority 0
  set copp-action copp-system-ttl
 !
 class copp-system-suppress priority 0
  set copp-action copp-system-suppress
 !
 class copp-system-subnet priority 0
  set copp-action copp-system-subnet
 !
 class copp-system-stp priority 0
  set copp-action copp-system-stp
 !
 class copp-system-sflow priority 0
  set copp-action copp-system-sflow
 !
 class copp-system-pim priority 0
  set copp-action copp-system-pim
 !
 class copp-system-ospf priority 0
  set copp-action copp-system-ospf
 !
 class copp-system-nat priority 0
  set copp-action copp-system-nat
 !
 class copp-system-mtu priority 0
  set copp-action copp-system-mtu
 !
 class copp-system-lldp priority 0
  set copp-action copp-system-lldp
 !
```

```
  class copp-system-lacp priority 0
   set copp-action copp-system-lacp
  !
  class copp-system-ip2me priority 0
   set copp-action copp-system-ip2me
  !
  class copp-system-igmp priority 0
   set copp-action copp-system-igmp
  !
  class copp-system-icmp priority 0
   set copp-action copp-system-icmp
  !
  class copp-system-iccp priority 0
   set copp-action copp-system-iccp
  !
  class copp-system-dhcpl2 priority 0
   set copp-action copp-system-dhcp
  !
  class copp-system-dhcp priority 0
   set copp-action copp-system-dhcp
  !
  class copp-system-bgp priority 0
   set copp-action copp-system-bgp
  !
  class copp-system-bfd priority 0
   set copp-action copp-system-bfd
  !
  class copp-system-arp priority 0
   set copp-action copp-system-arp
  !
 !
 policy-map oob-qos-policy type qos
  description "QoS Ratelimiting policy for OOB port"
  class class-oob-dhcp-client priority 1020
   police cir 512000
  !
  class class-oob-dhcp-server priority 1015
   police cir 512000
  !
  class class-oob-arp priority 1010
   police cir 256000
  !
  class class-oob-ipv6-multicast priority 1005
   police cir 256000
  !
  class class-oob-ip-multicast priority 1000
   police cir 256000
  !
```